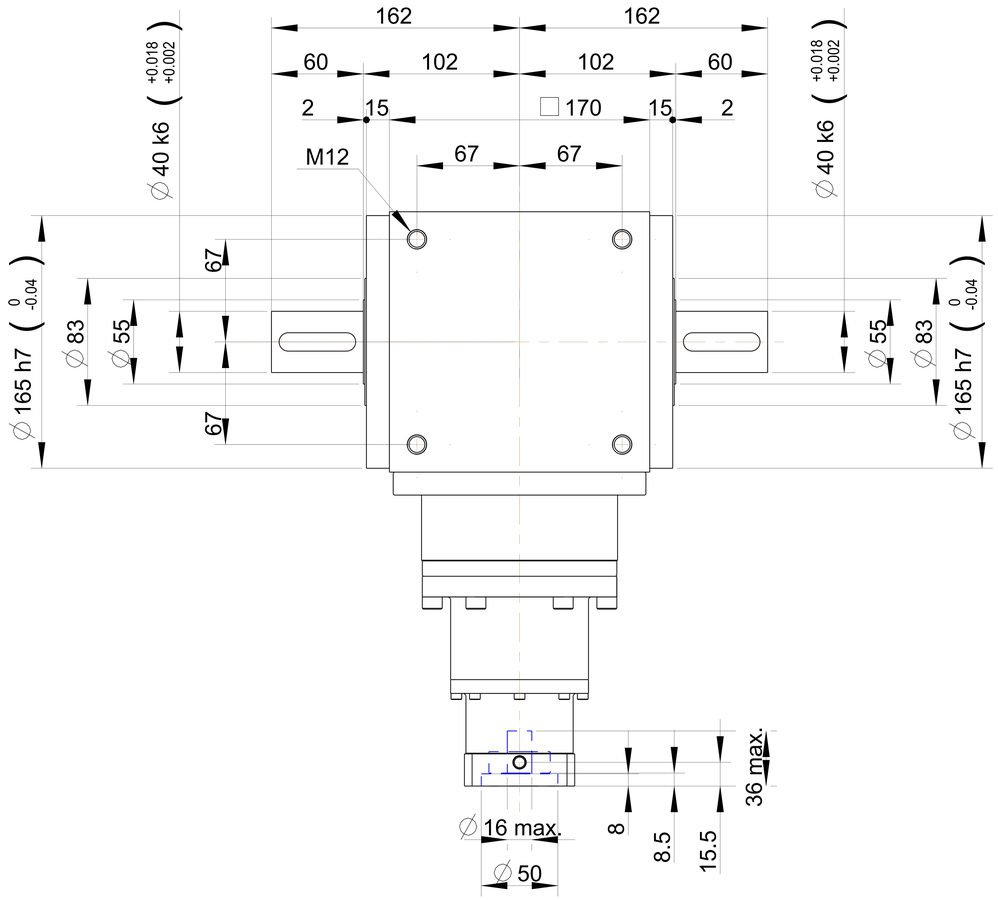

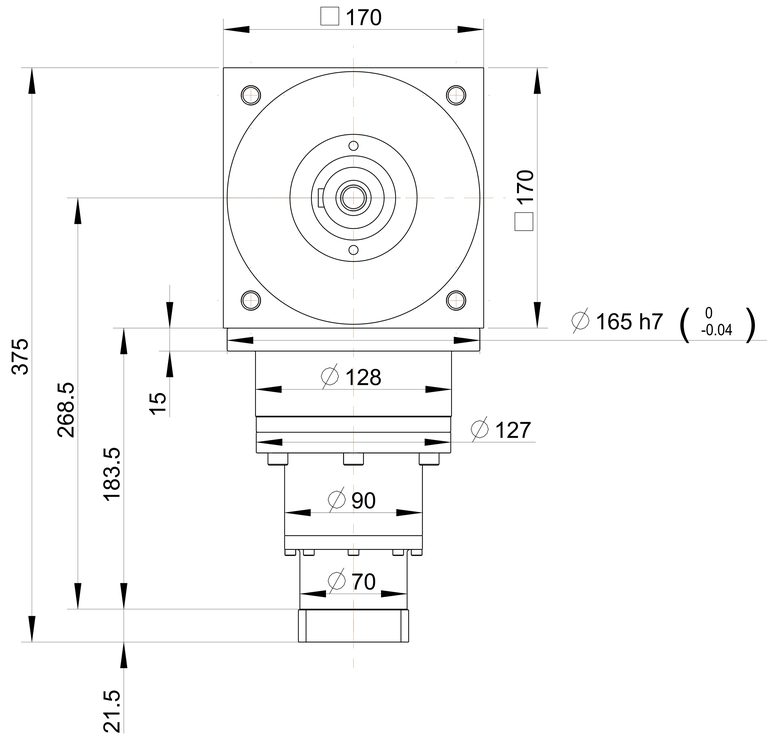

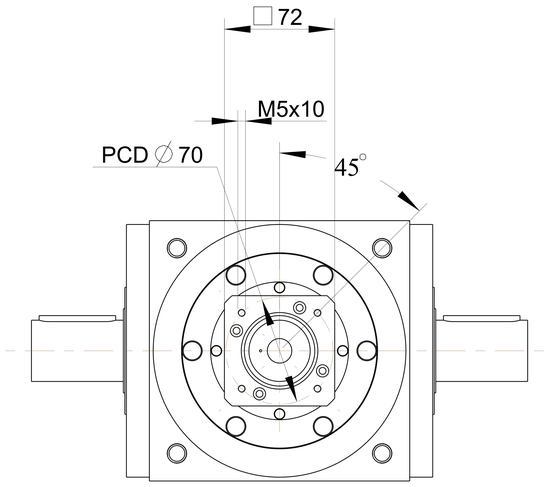

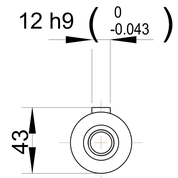

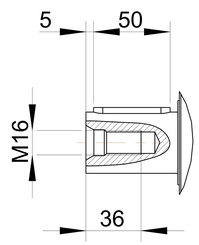

PART NO. ATB170FL3-P0405200512 AD-PE70-M72-12		APEX DYNAMICS, INC.
APPROVALS	DATE	TITLE ATB170FL 3 STAGES AND MOTOR FLANGE MOUNTING
DRAWN		DWG NO. ATB170FL3-P0405200512
CHECKED		
APPROVED		SIZE 2A0 / SCALE 1:1 / REV

ATB170FL-07-S2 ADTUSSBHFAB40