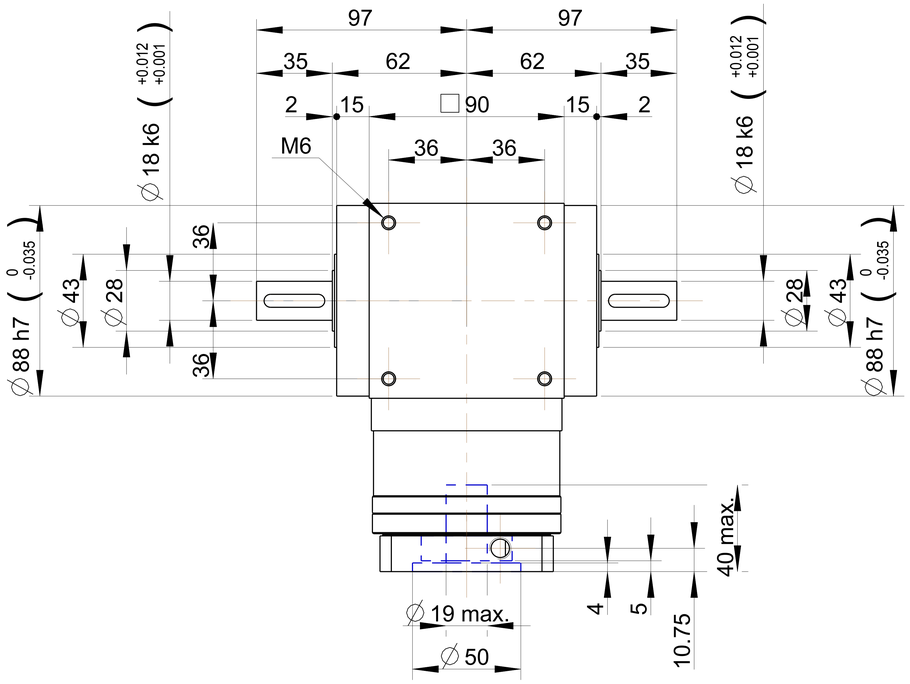

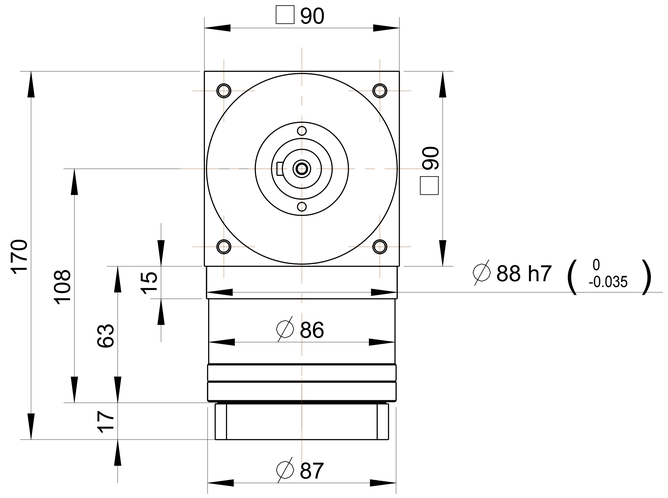

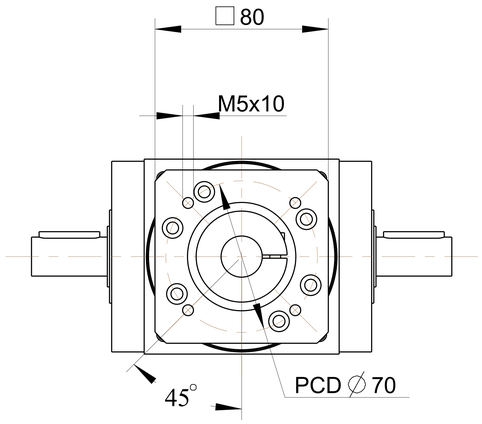

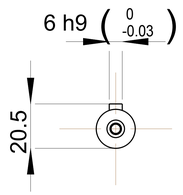

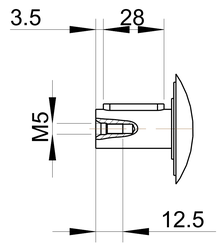

PART NO. ATB090FL1-P0403300208 AD-P90-M80-8		APEX DYNAMICS, INC.
APPROVALS	DATE	TITLE ATB090FL 1 STAGE AND MOTOR FLANGE MOUNTING
DRAWN		
CHECKED		DWG NO. ATB090FL1-P0403300208
APPROVED		SIZE A0 / SCALE 1:1 / REV

ATB090FL - 004 - S2 / ATS3VIBSHLHG-X8943