ATB280FH - 075 / MITSUBISHI HG-SR102

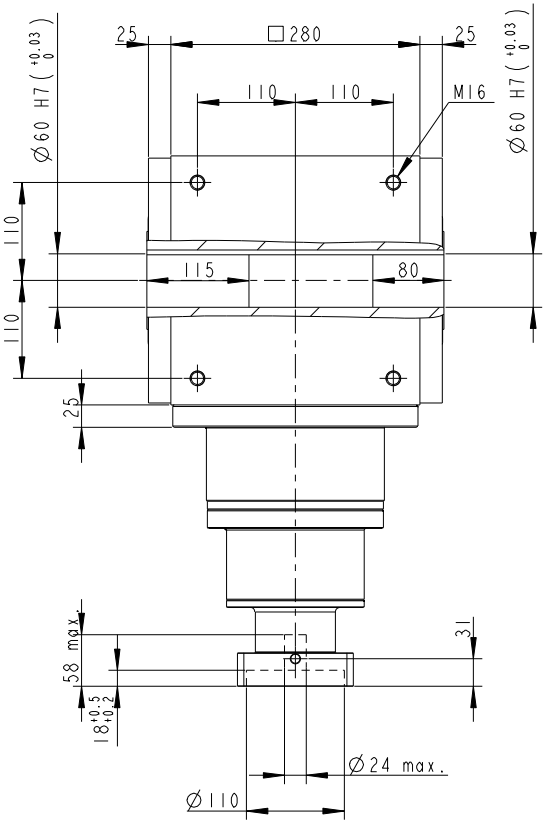

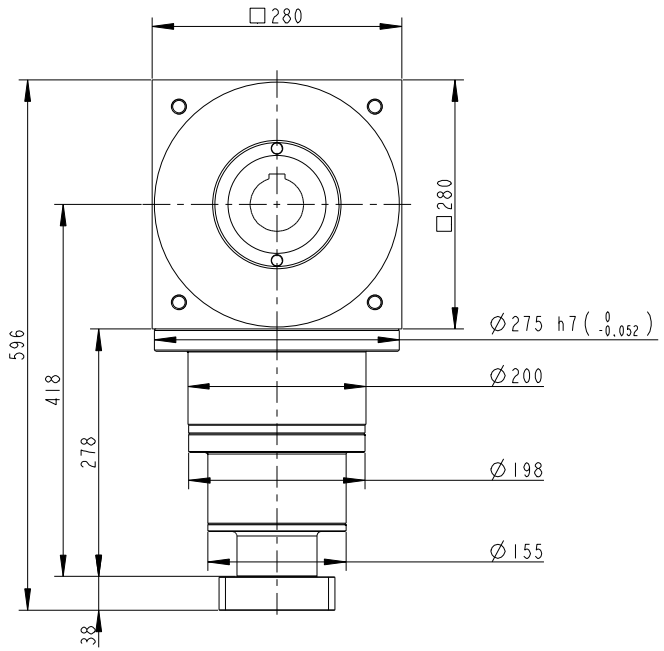

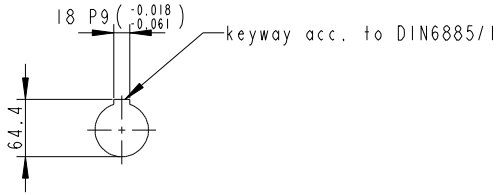

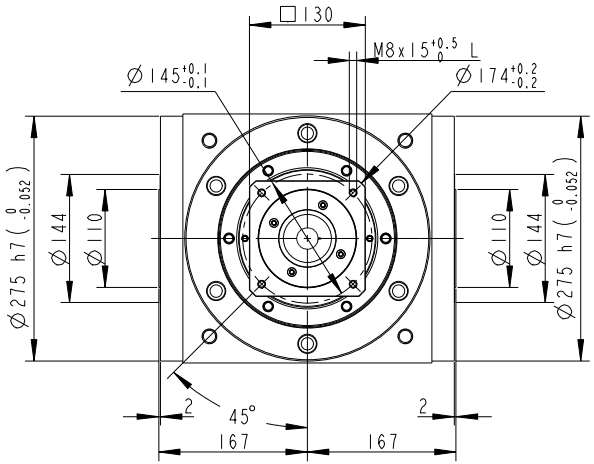

INERTIA: 34.02 ~ 34.24 kg-cm^2
MASS: 156.5 kg
BACKLASH <= 8 arcmin

PART NO. ATB280FH3-P0405301001 ATB280FH-3,AD-PE90-M130-I		APEX DYNAMICS, INC.
APPROVALS	DATE	TITLE ATB280FH 3 STAGE , RATIO= 75~500 AND MOTOR FLANGE MOUNTING
DRAWN		
CHECKED		DWG NO. ATB280FH3-P0405301001
APPROVED		SIZE 3A0 / SCALE 1:1 / REV 1