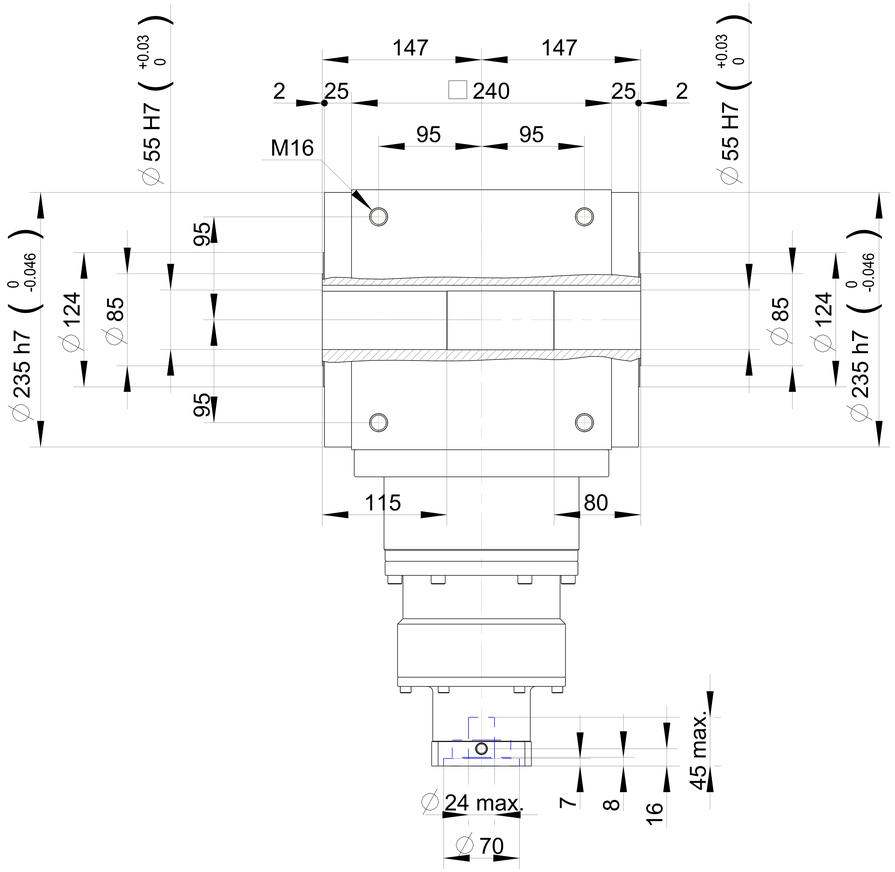

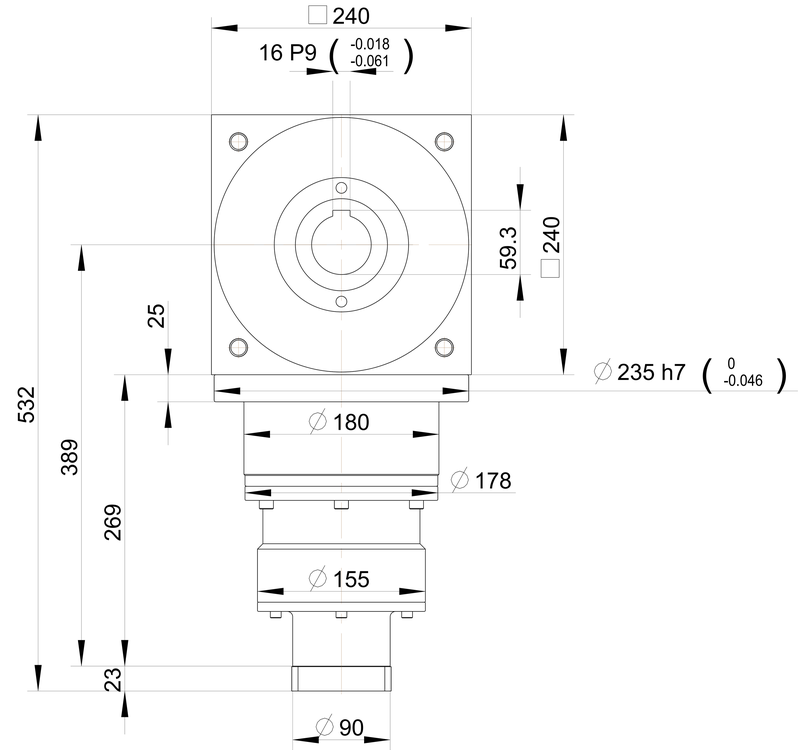

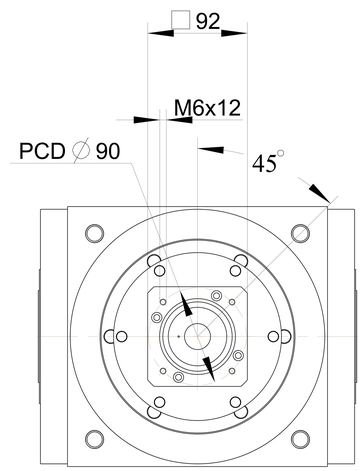

PART NO.		
ATB240FH3-P0405300308 AD-PE90-M92-8		APEX DYNAMICS, INC.
APPROVALS	DATE	TITLE ATB240FH 3 STAGES AND MOTOR FLANGE MOUNTING
DRAWN		
CHECKED		DWG NO. ATB240FH3-P0405300308
APPROVED		SIZE 3A0 / SCALE 1:1 / REV