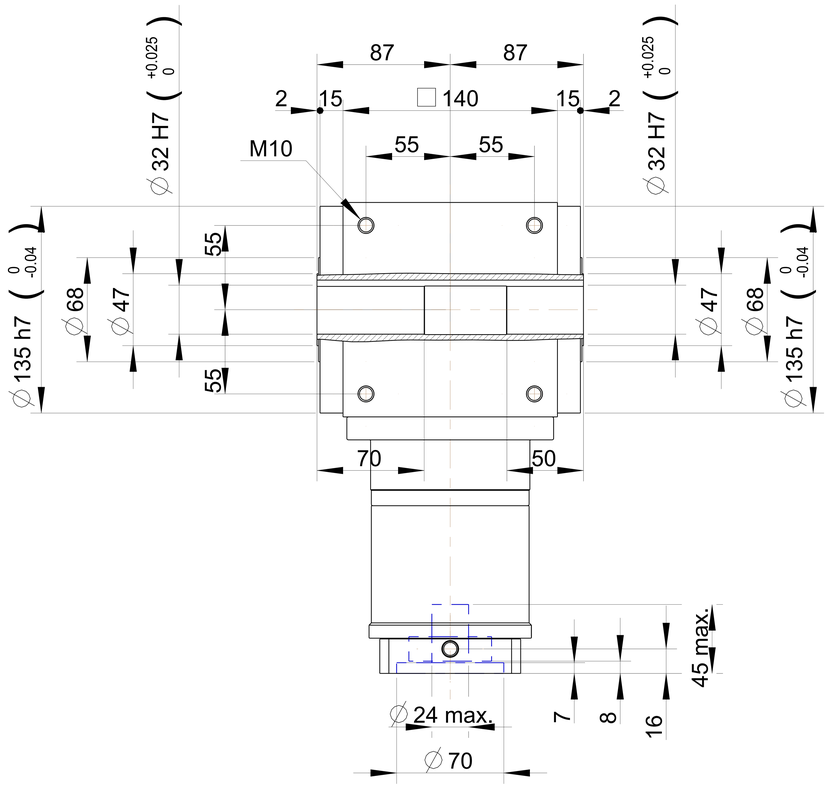

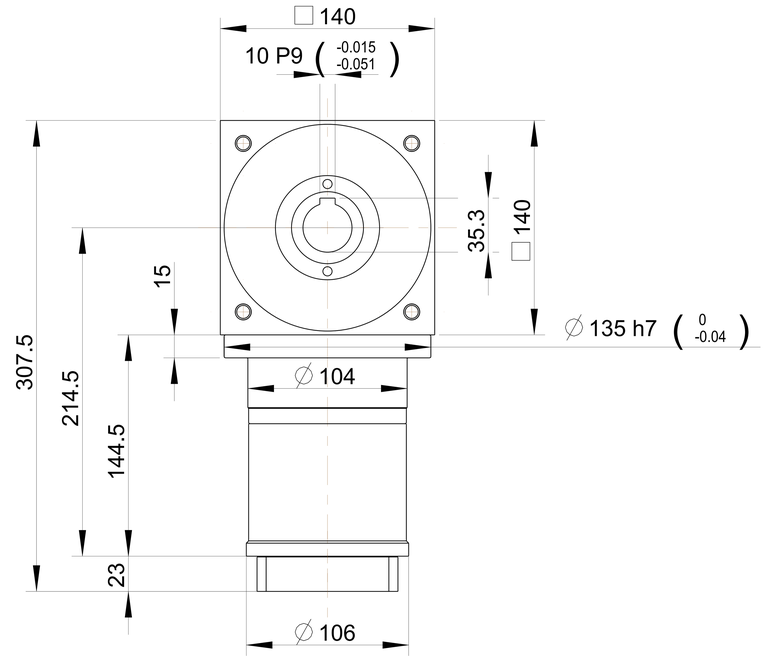

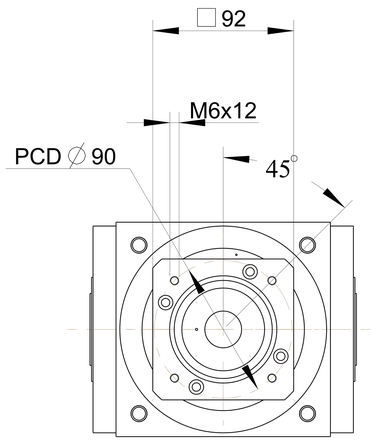

PART NO. ATB140FH2-P0405300308 AD-PE90-M92-8		APEX DYNAMICS, INC.
APPROVALS	DATE	TITLE ATB140FH 2 STAGES AND MOTOR FLANGE MOUNTING
DRAWN		
CHECKED		DWG NO. ATB140FH2-P0405300308
APPROVED		SIZE 2A0 / SCALE 1:1 / REV

ATB140FH2-P0405300308 AD-PE90-M92-8