MOTOVARIO® 에이전트
HEART OF MOTION

REDUCER SPEC	
MODEL	NMRV-P 110
SERVICE FACTOR	0.8
RATIO	100
OUTPUT [rpm]	20
OUTPUT TORQUE [Nm]	444
BACKLASH [arc-m]	6' - 14'
WEIGHT [kg]	21
MOTOR SPEC	
MODEL	HG-SR152
POWER [kW]	1.5
INPUT [rpm]	2000
WEIGHT [kg]	7.3

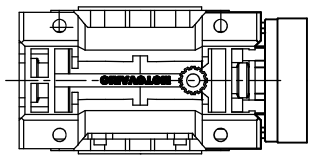

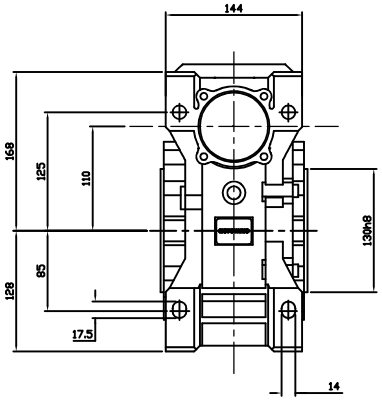

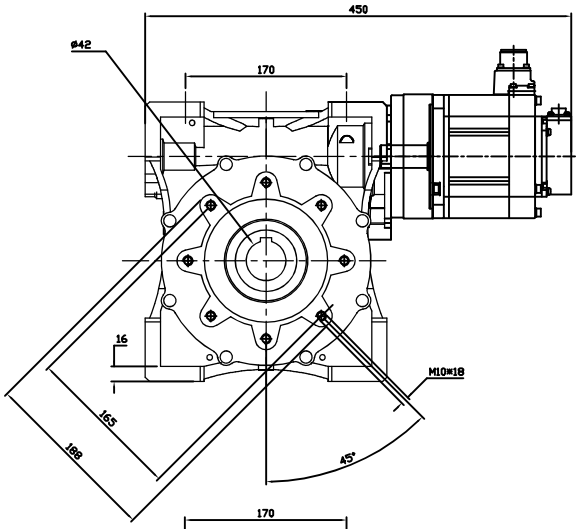

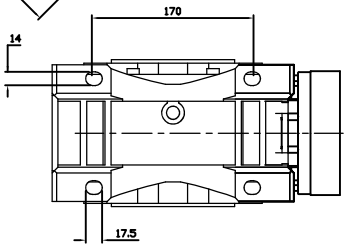

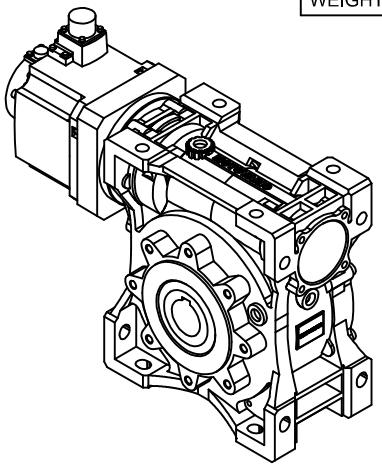

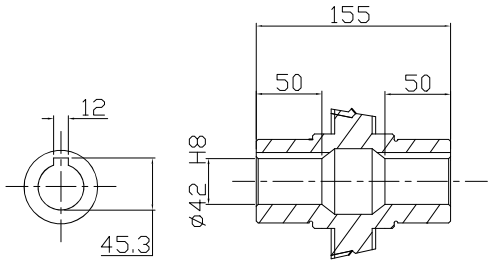

OUTPUT HOLLOW SHAFT

(주)한국체인모터
Tel. 032-815-8888 Fax. 815-8020
www.hcmfa.com

PROJECT		MOTOVARIO					
DRAWN	SEO Y.S	DATE		REV	A	SCALE	1:1
CHECKED	KIM J.S	DATE		UNIT	MM	PAGE	-
APPROVED	LEE J.Y	DATE					