MOTOVARIO® 에이전트
HEART OF MOTION

REDUCER SPEC	
MODEL	NMRV-P 063
SERVICE FACTOR	2.9
RATIO	25
OUTPUT [rpm]	120
OUTPUT TORQUE [Nm]	24.6
BACKLASH [arc-m]	18' - 28'
WEIGHT [kg]	5.8
MOTOR SPEC	
MODEL	HG-KR43
POWER [kW]	0.4
INPUT [rpm]	3000
WEIGHT [kg]	1.4

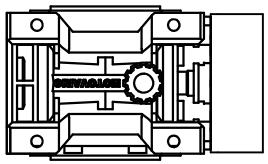

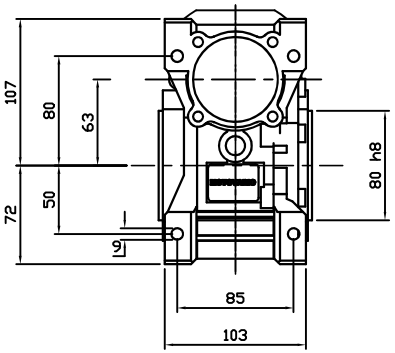

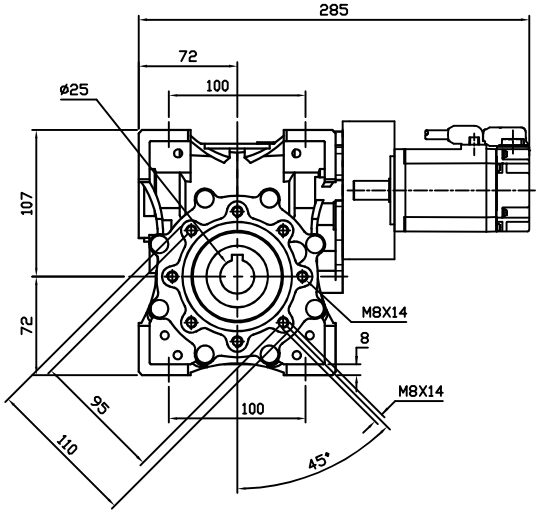

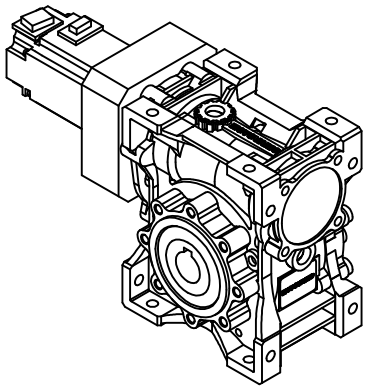

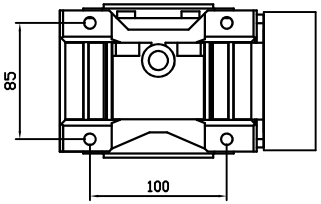

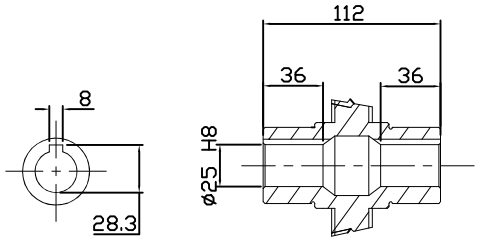

OUTPUT HOLLOW SHAFT

(주)한국체인모터
Tel. 032-815-8888 Fax. 815-8020
www.hcmfa.com

PROJECT		MOTOVARIO					
DRAWN	SEO Y.S	DATE		REV	A	SCALE	1:1
CHECKED	KIM J.S	DATE		UNIT	MM	PAGE	-
APPROVED	LEE J.Y	DATE					