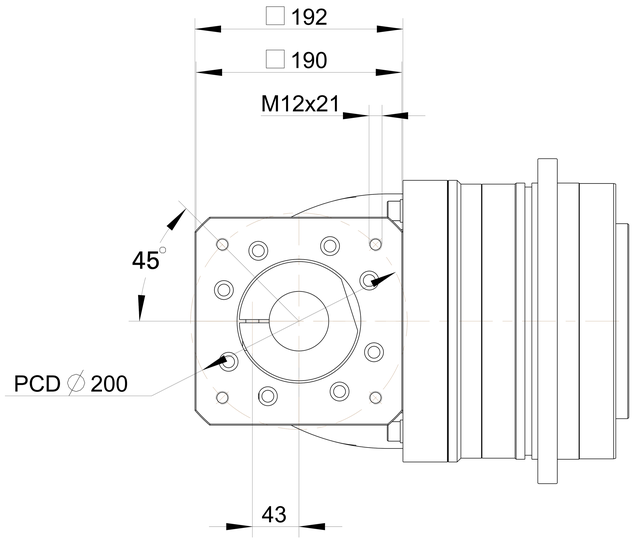

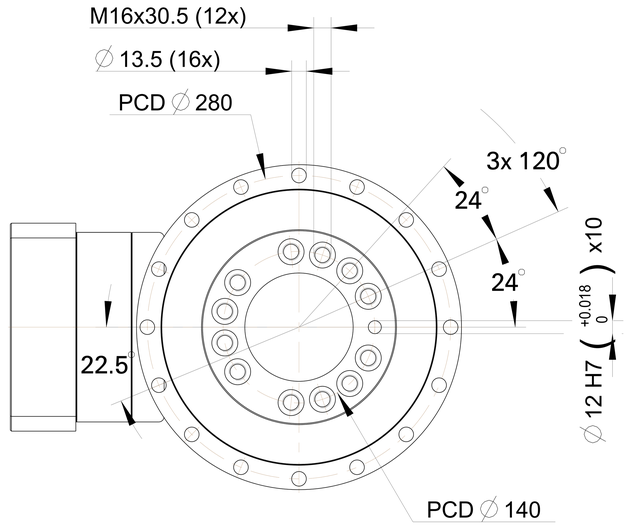

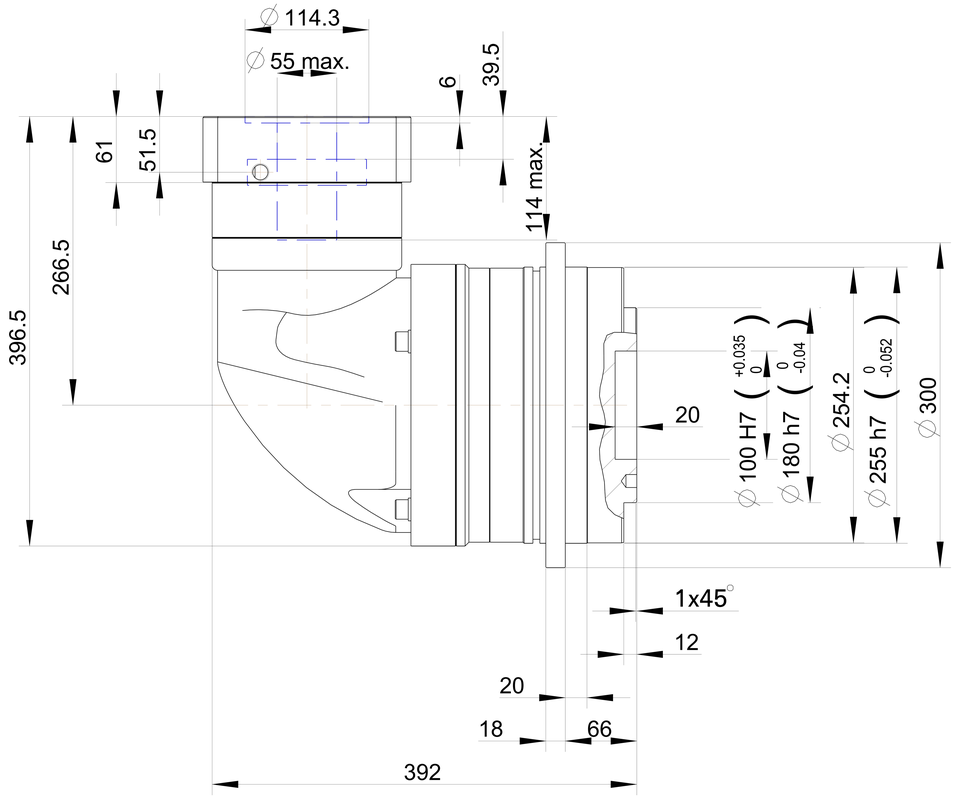

PART NO. ADR2551-P0403790008 AD-P255-M190-Y8	APEX DYNAMICS, INC.
APPROVALS / DATE	TITLE ADR255 1 STAGE AND MOTOR FLANGE MOUNTING
DRAWN	DWG NO. ADR2551-P0403790008
CHECKED	
APPROVED	SIZE 3A0 / SCALE 1:1 / REV