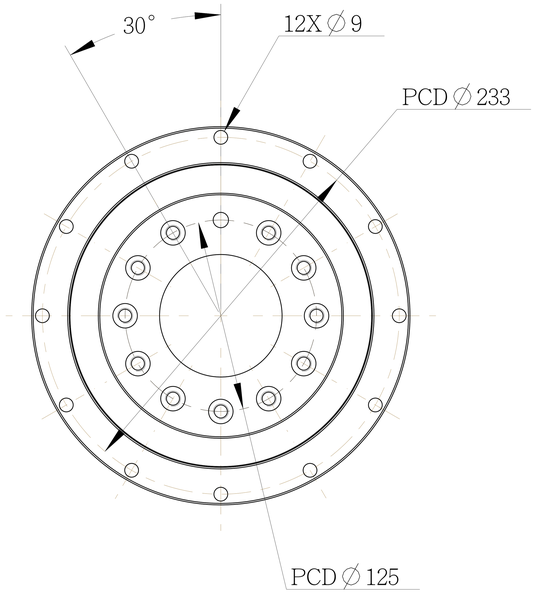

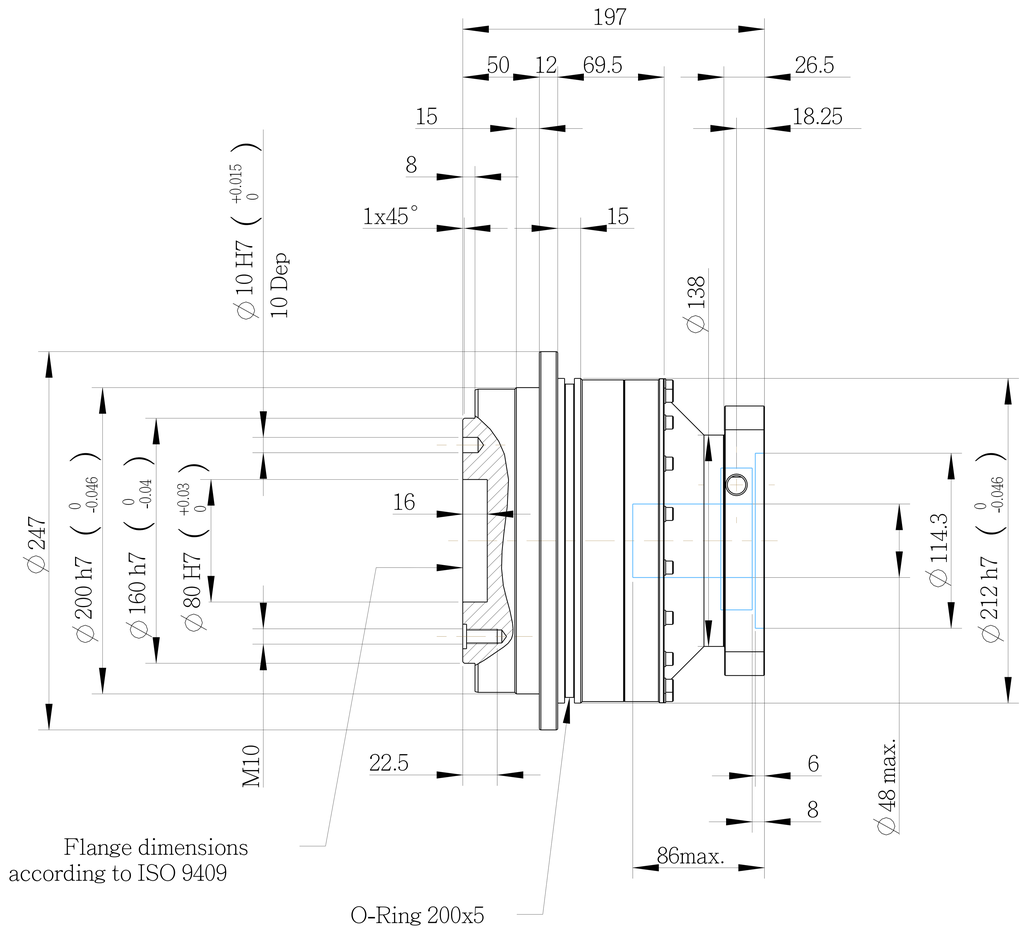

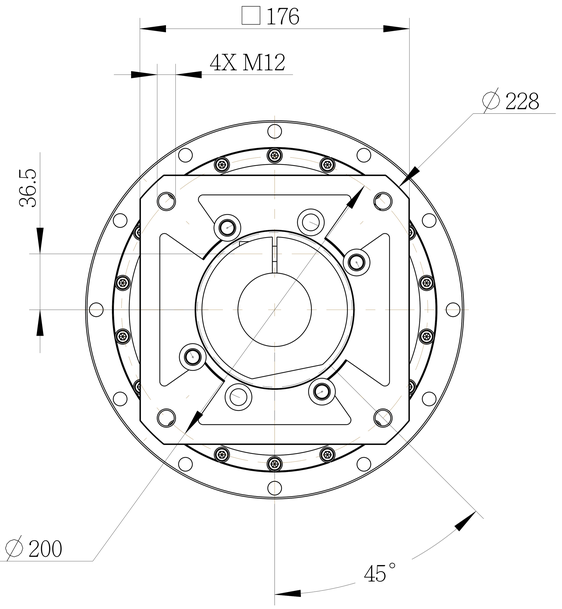

INERTIA: 22.48~25.03kg-cm^2
MASS: 31.6kg

MICRO BACKLASH: 1arcmin
REDUCED BACKLASH: 3arcmin
STANDARD BACKLASH: 5arcmin

BUSHING SUPPLIED WHEN MOTOR SHAFT DIAMETER SMALL THAN ∅ 48

PART NO. AD2001-P0403600401 AD200-1, AD-P200-M176-1		APEX DYNAMICS, INC.
APPROVALS	DATE	TITLE AD200 1 Stage, Ratio=4~10 AND MOTOR FLANGE MOUNTING
DRAWN Cindy		DWG NO. AD2001-P0403600401
CHECKED		
APPROVED		SIZE 2A0 / SCALE 1:1 / REV 1.0

AD200 - 00 - P2 AMTRNSBR1R-SB702