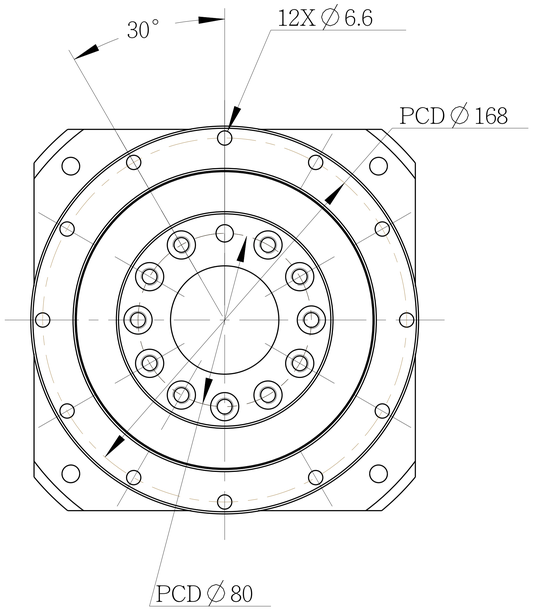

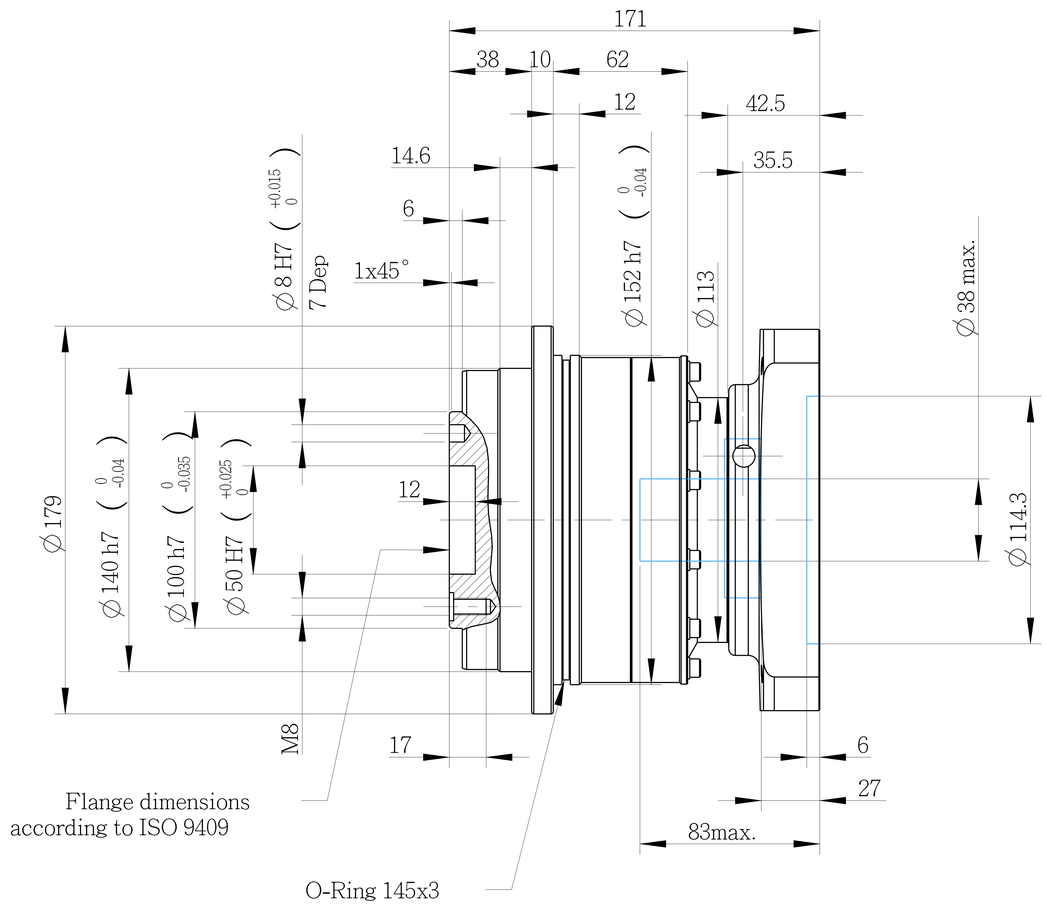

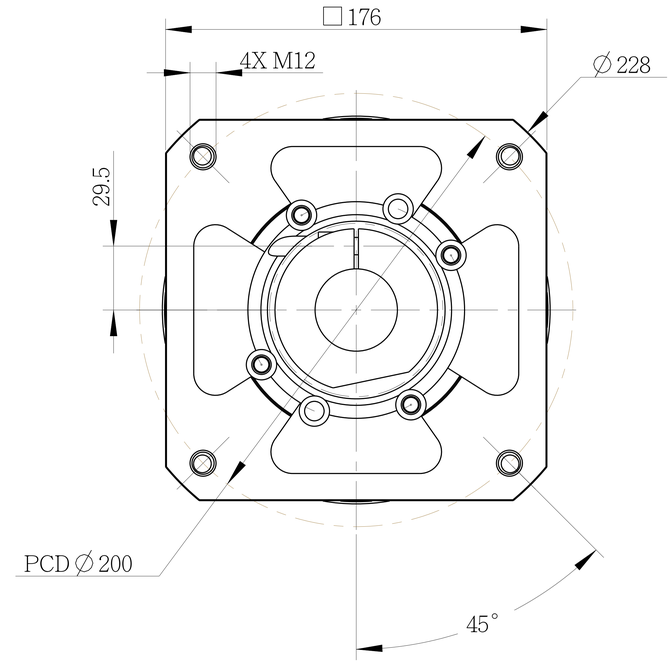

INERTIA: 7.03~7.54kg-cm^2
MASS: 11.9kg

MICRO BACKLASH: 1arcmin
REDUCED BACKLASH: 3arcmin
STANDARD BACKLASH: 5arcmin

BUSHING SUPPLIED WHEN MOTOR SHAFT DIAMETER SMALL THAN ∅38

PART NO. AD1401-P0403500801 AD140-1, AD-P140-M176-1		APEX DYNAMICS, INC.
APPROVALS	DATE	TITLE AD140 1 Stage, Ratio=4~10 AND MOTOR FLANGE MOUNTING
DRAWN Cindy		DWG NO. AD1401-P0403500801
CHECKED		
APPROVED		SIZE A0 / SCALE 1:1 / REV 1.0

AD040-004-F2 / APEX DYNAMICS INC.