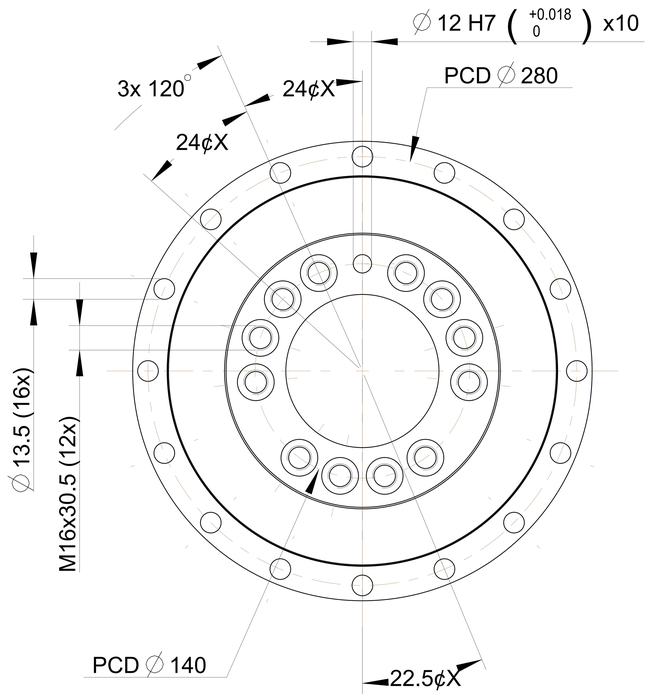

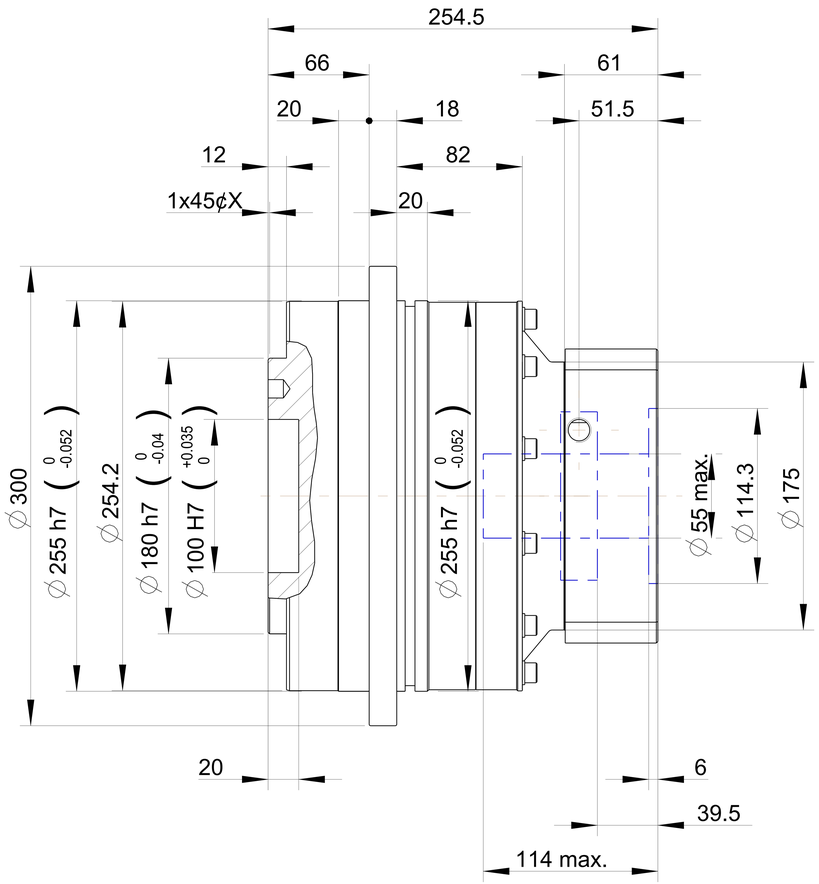

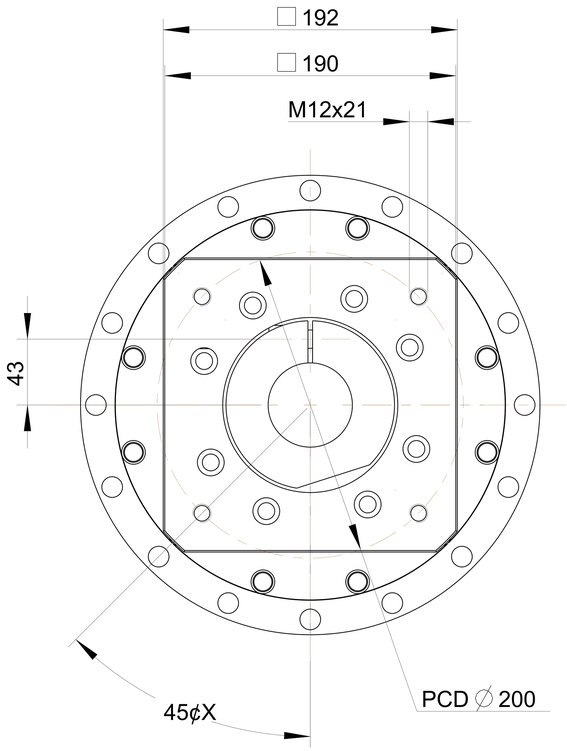

PART NO. AD2551-P0403790008 AD-P255-M190-Y8		APEX DYNAMICS, INC.
APPROVALS	DATE	TITLE AD255 1 STAGE AND MOTOR FLANGE MOUNTING
DRAWN		DWG NO. AD2551-P0403790008
CHECKED		
APPROVED		SIZE 2A0 / SCALE 1:1 / REV

AD255 - 006 - P2 / AD2551H0001H0-S0153