AFR075A - 025 - S2 - P2 / MITSUBISHI HG-KR73

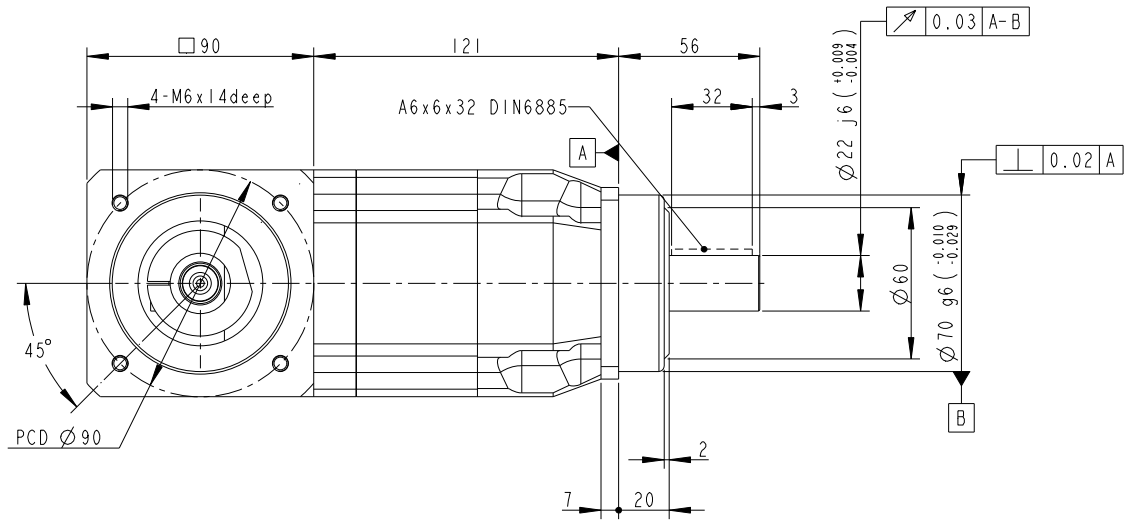

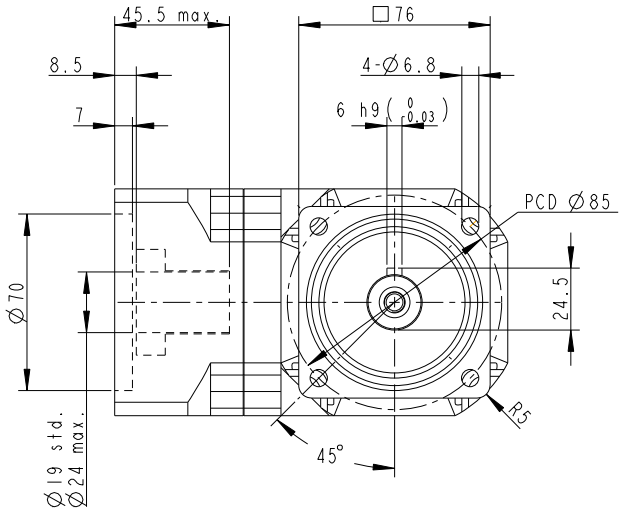

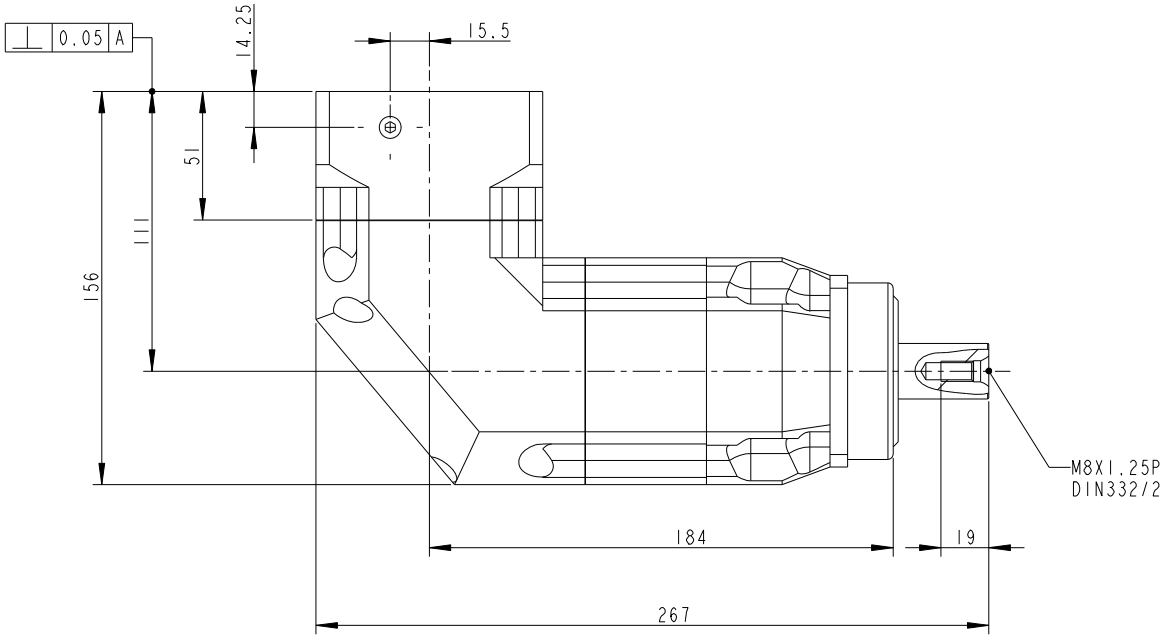

INERTIA: 1.87~2.25 kg-cm^2
MASS: 8 Kg

SHAFT OPTION S1: SMOOTH OUTPUT SHAFT(STANDARD)
SHAFT OPTION S2: OUTPUT SHAFT WITH KEYWAY
MICRO BACKLASH<= 4arcmin
REDUCED BACKLASH<= 7arcmin
STANDARD BACKLASH<= 9arcmin

***BUSHING SUPPLIED WHEN MOTOR SHAFT DIAMETER SMALL THAN Ø24

PART NO. AFR075A2-P0401300305 AFR075A-2, AD-W90-M90-5		APEX DYNAMICS, INC.			
APPROVALS	DATE	TITLE AFR075A 2 STAGES, RATIO= 25~200 AND MOTOR FLANGE MOUNTING			
DRAWN Cindy		DWG NO. AFR075A2-P0401300305			
CHECKED					
APPROVED			SIZE A1	SCALE 1:1	REV 3.0