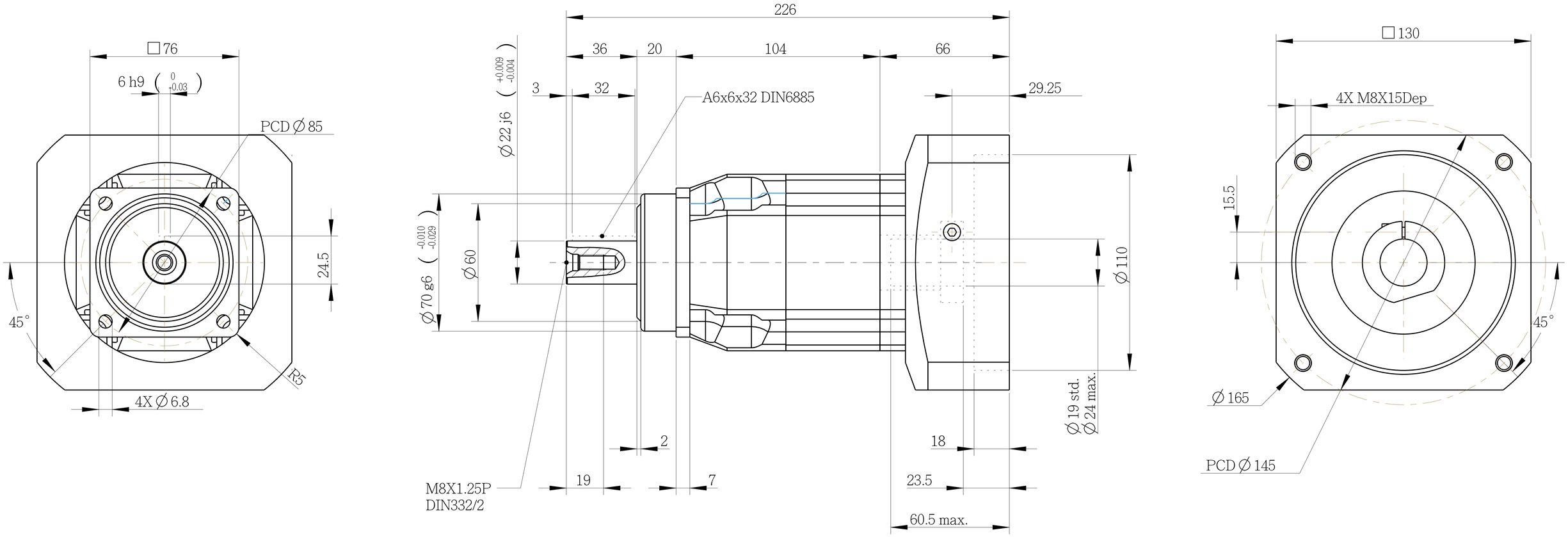

AF075AM1 - 012 - S2 - P2 /MITSUBISHI HG-SR102

INERTIA: 0.44~0.61kg-cm^2
MASS: 5.5kg

SHAFT OPTION S1: SMOOTH OUTPUT SHAFT(STANDARD)
SHAFT OPTION S2: OUTPUT SHAFT WITH KEYWAY
REDUCED BACKLASH<= 5arcmin
STANDARD BACKLASH<= 7arcmin

BUSHING SUPPLIED WHEN MOTOR SHAFT DIAMETER SMALL THAN ∅24

Old Part No. AF075A2-P4031004

PART NO. AF075A2-P0401301004 AF075A-2, AD-W90-M130-4		APEX DYNAMICS, INC.
APPROVALS	DATE	TITLE AF075 2 STAGES, RATIO= 12~100 AND MOTOR FLANGE MOUNTING
DRAWN Cindy		
CHECKED		DWG NO. AF075A2-P0401301004
APPROVED		SIZE A1 / SCALE 1:1 / REV 3.0