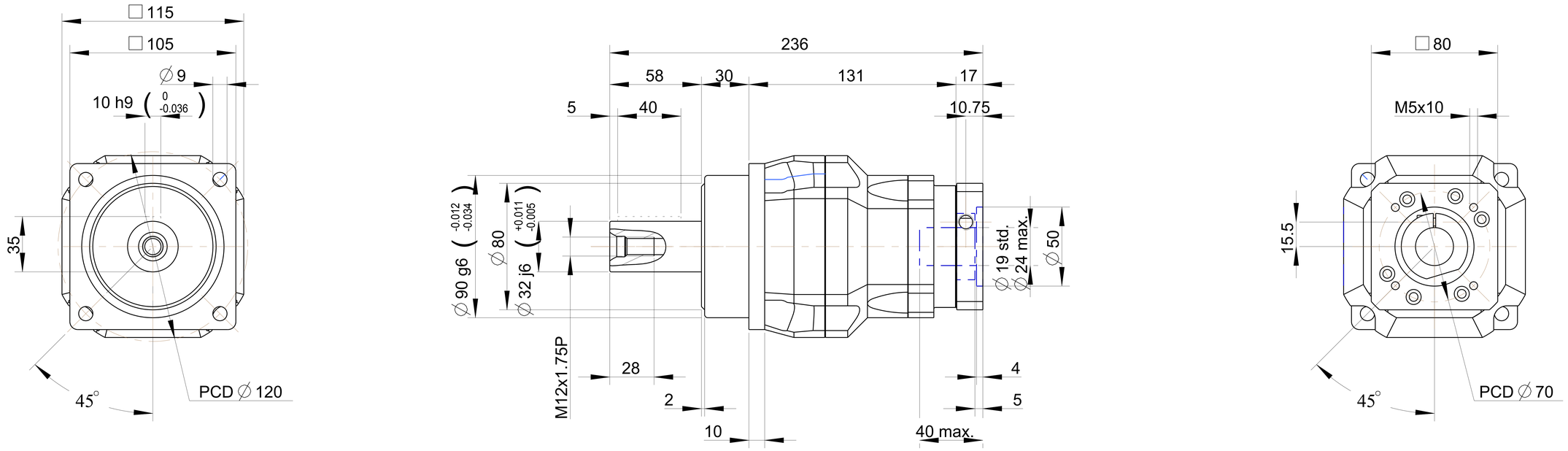


| | | |
|---|---|---|
| PART NO.<br>AF1002-P0403300208<br>AD-P90-M80-8 | | APEX DYNAMICS, INC. |
| APPROVALS | DATE | TITLE<br>AF100 2 STAGES<br>AND MOTOR FLANGE MOUNTING |
| DRAWN | | DWG NO.<br>AF1002-P0403300208 |
| CHECKED | | |
| APPROVED | | SIZE A0 / SCALE 1:1 / REV |

AF100-002-S2-P2/MTSNIBSHLHG-KR23