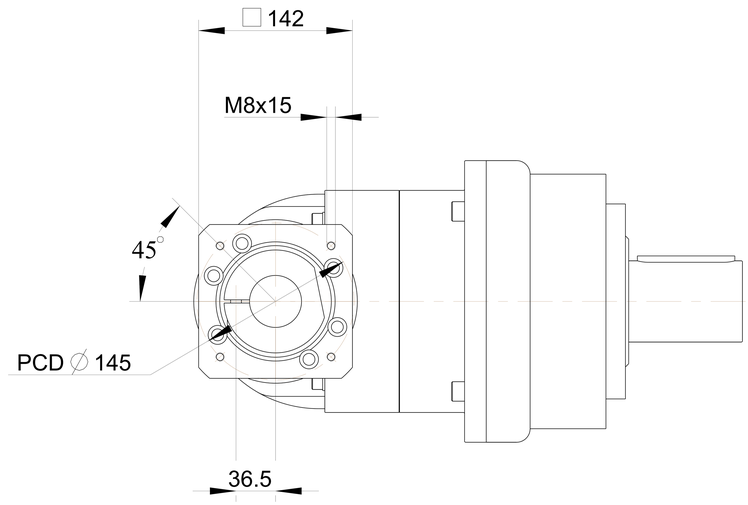

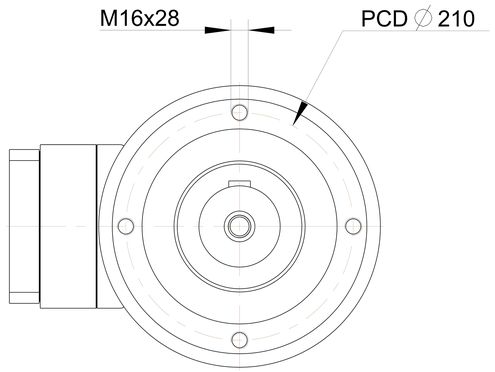

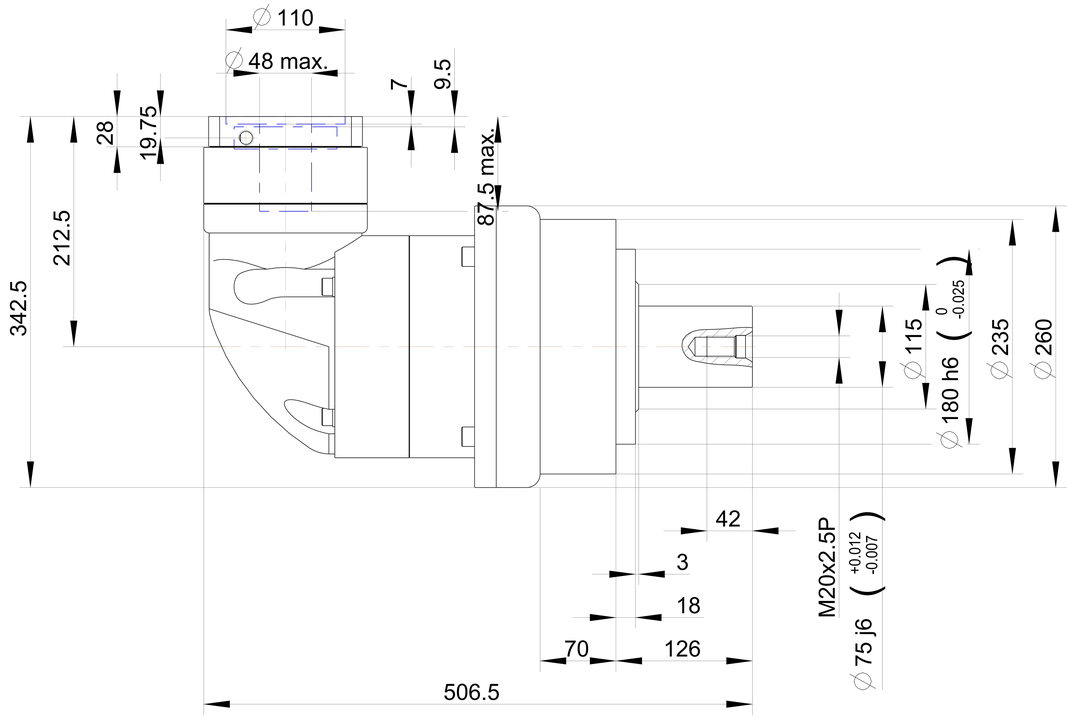

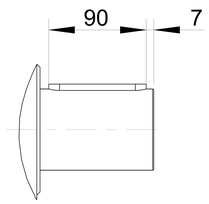

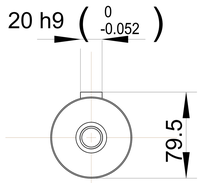

PART NO. AER2352-P0403600102 AD-P200-M142-2		APEX DYNAMICS, INC.
APPROVALS	DATE	TITLE AER235 2 STAGES AND MOTOR FLANGE MOUNTING
DRAWN		
CHECKED		DWG NO. AER2352-P0403600102
APPROVED		SIZE 3A0 / SCALE 1:1 / REV