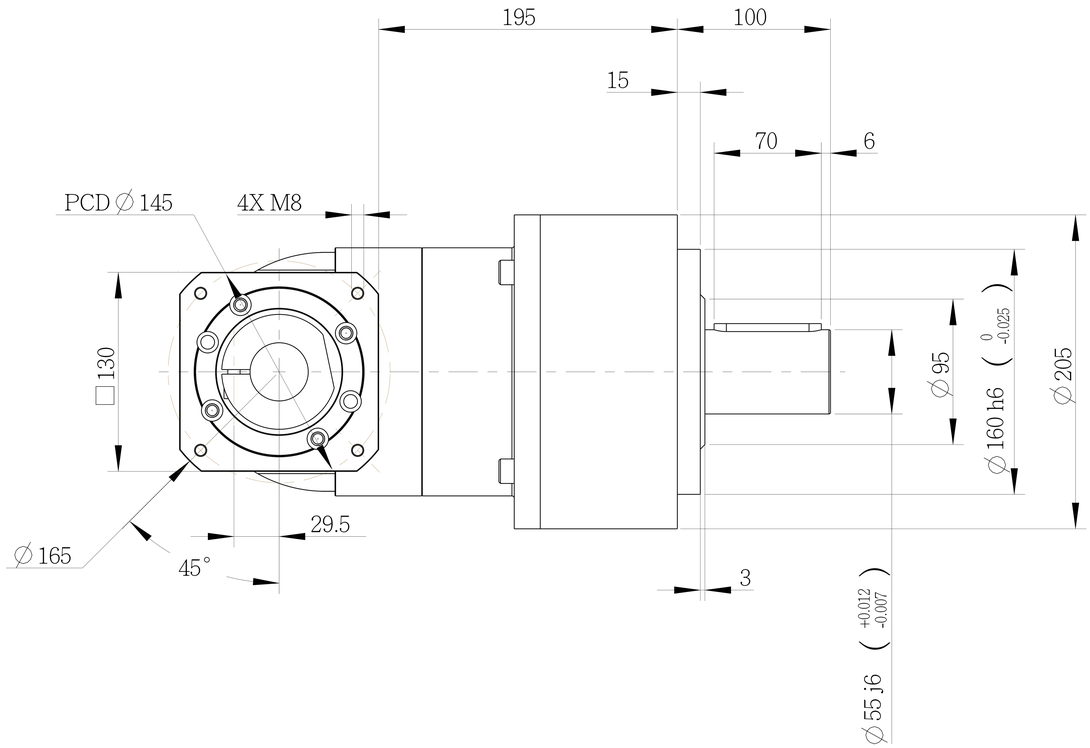

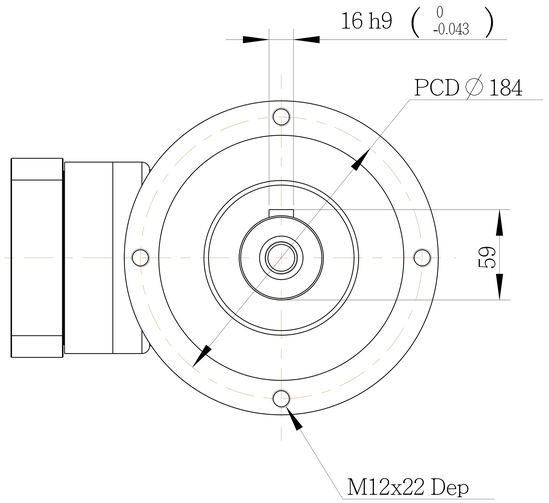

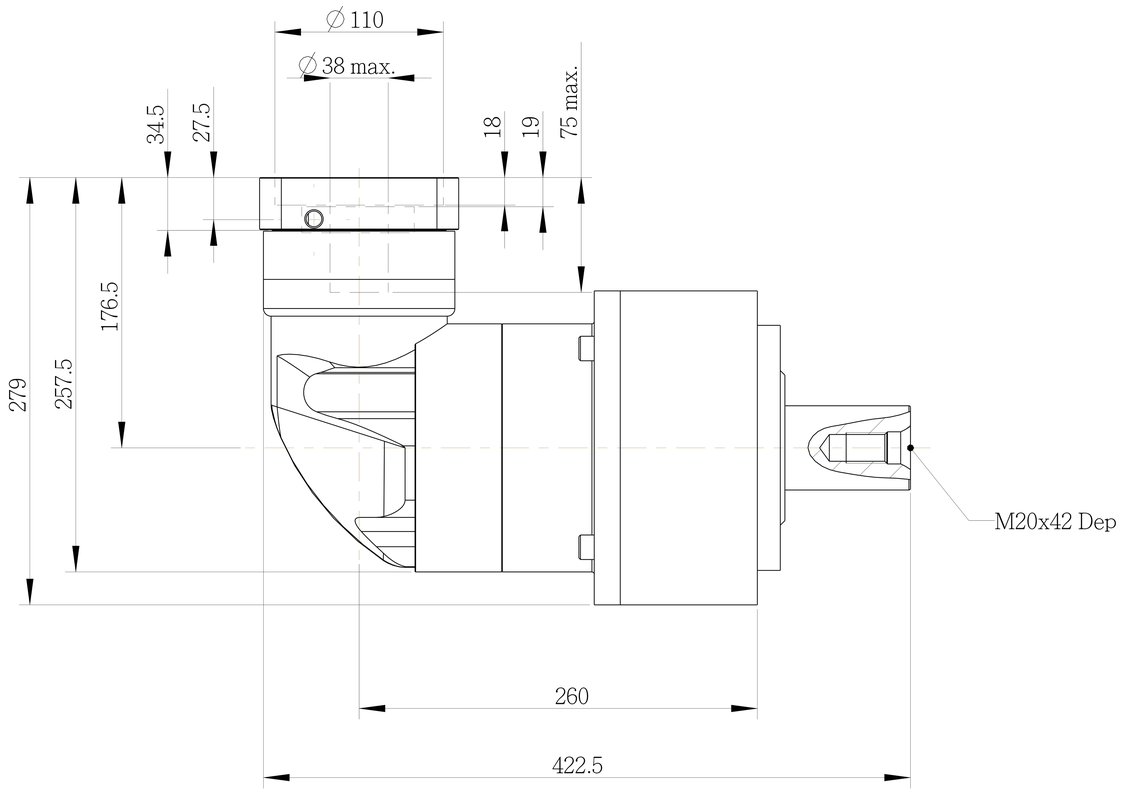

PART NO. AER2052-P0403500101 AER205-2, AD-P140-M130-1		APEX DYNAMICS, INC.
APPROVALS	DATE	TITLE AER-205 2 Stages AND MOTOR FLANGE MOUNTING
DRAWN Cindy		DWG NO. AER2052-P0403500101
CHECKED		
APPROVED		SIZE 2A0 / SCALE 1:1 / REV 1.0

AER205-040/AER2052-P0403500101 DC-SB152