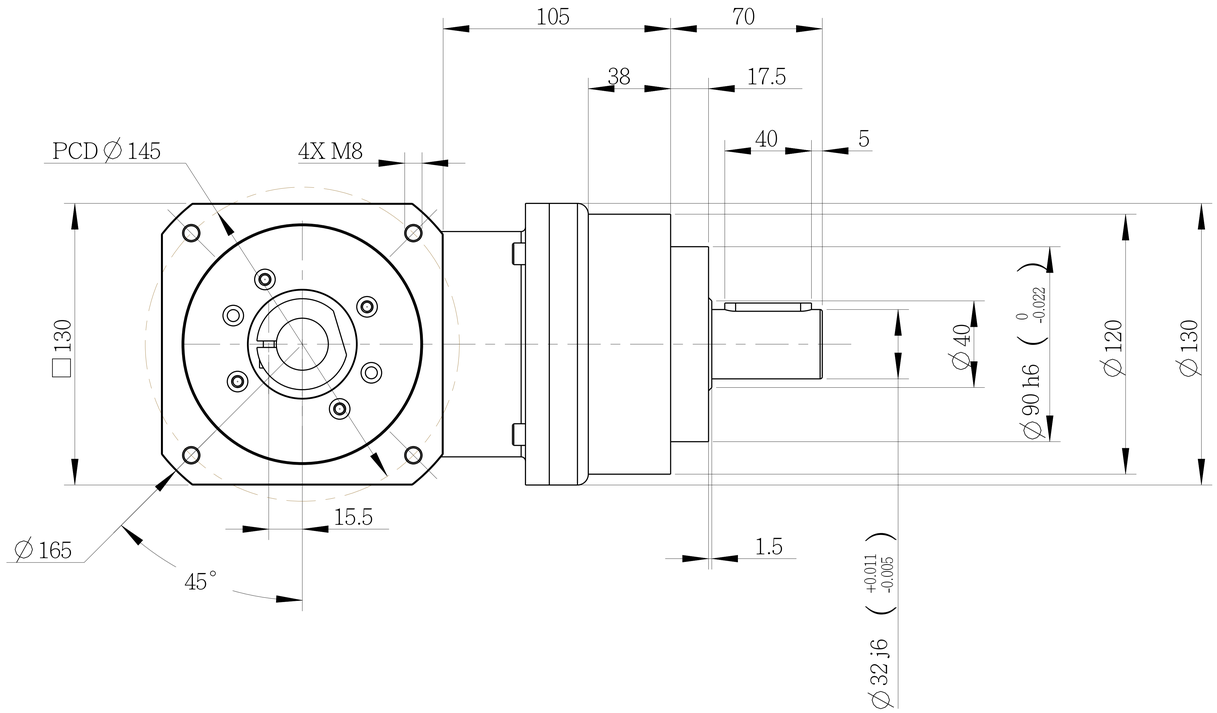

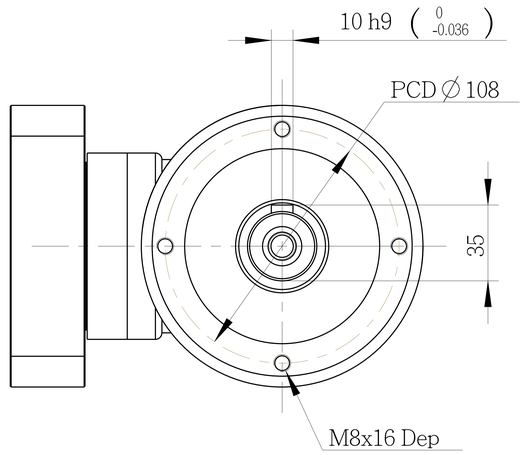

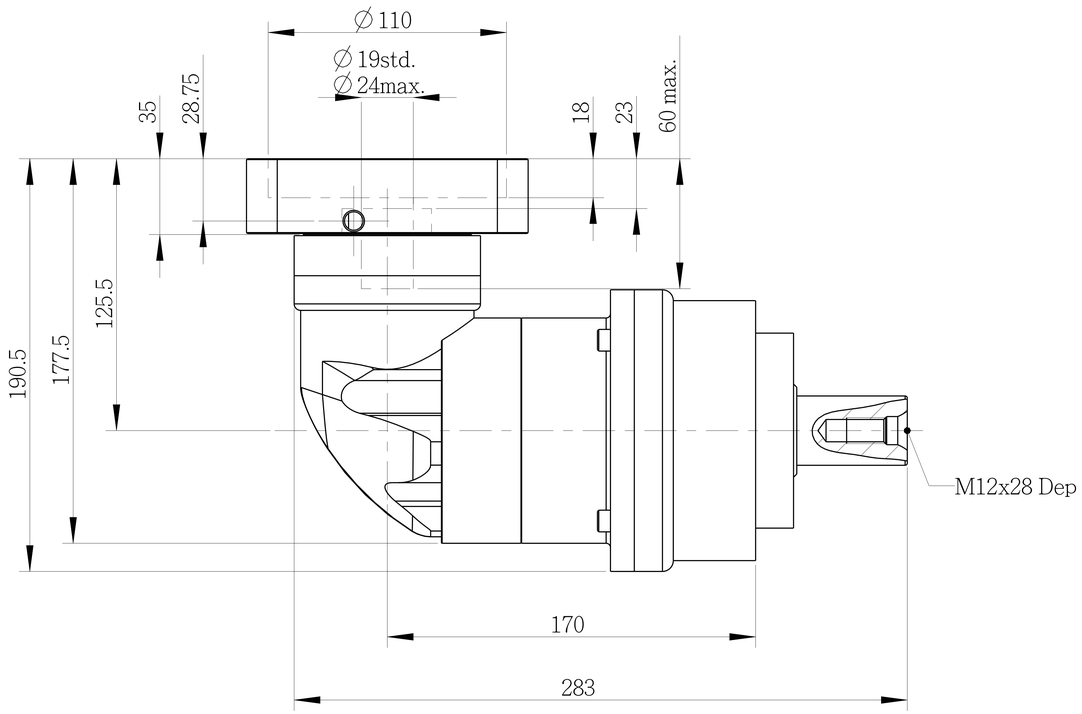

PART NO. AER1202-P0403302001 AER120-2, AD-P90-M130-1		APEX DYNAMICS, INC.
APPROVALS	DATE	TITLE AER-120 2 Stages AND MOTOR FLANGE MOUNTING
DRAWN Cindy		DWG NO. AER1202-P0403302001
CHECKED		
APPROVED		SIZE A0 / SCALE 1:1 / REV 1.0

AER120M1 -02S / AER1202M1-S-S18.52