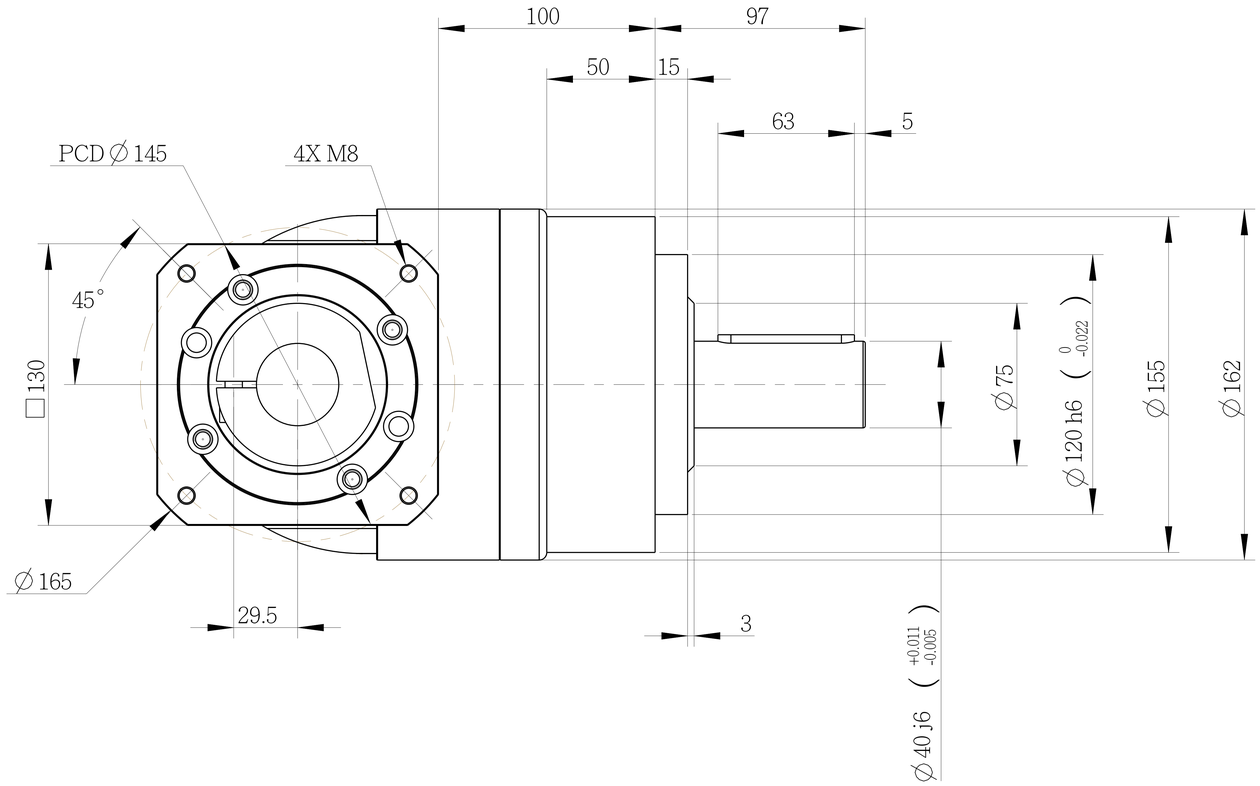

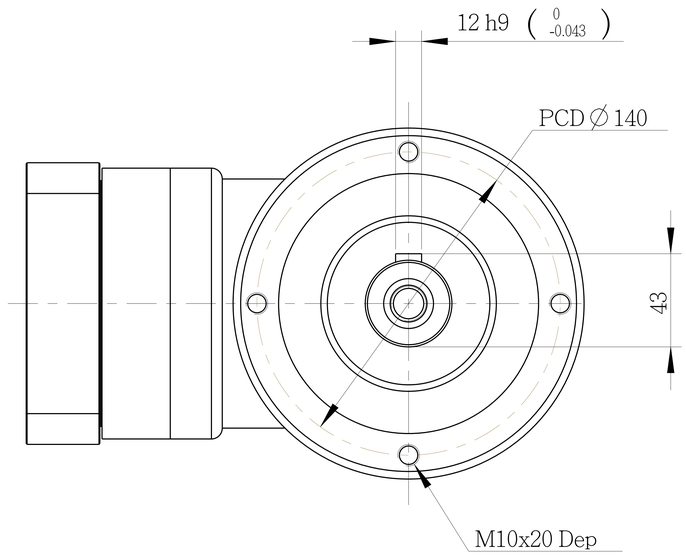

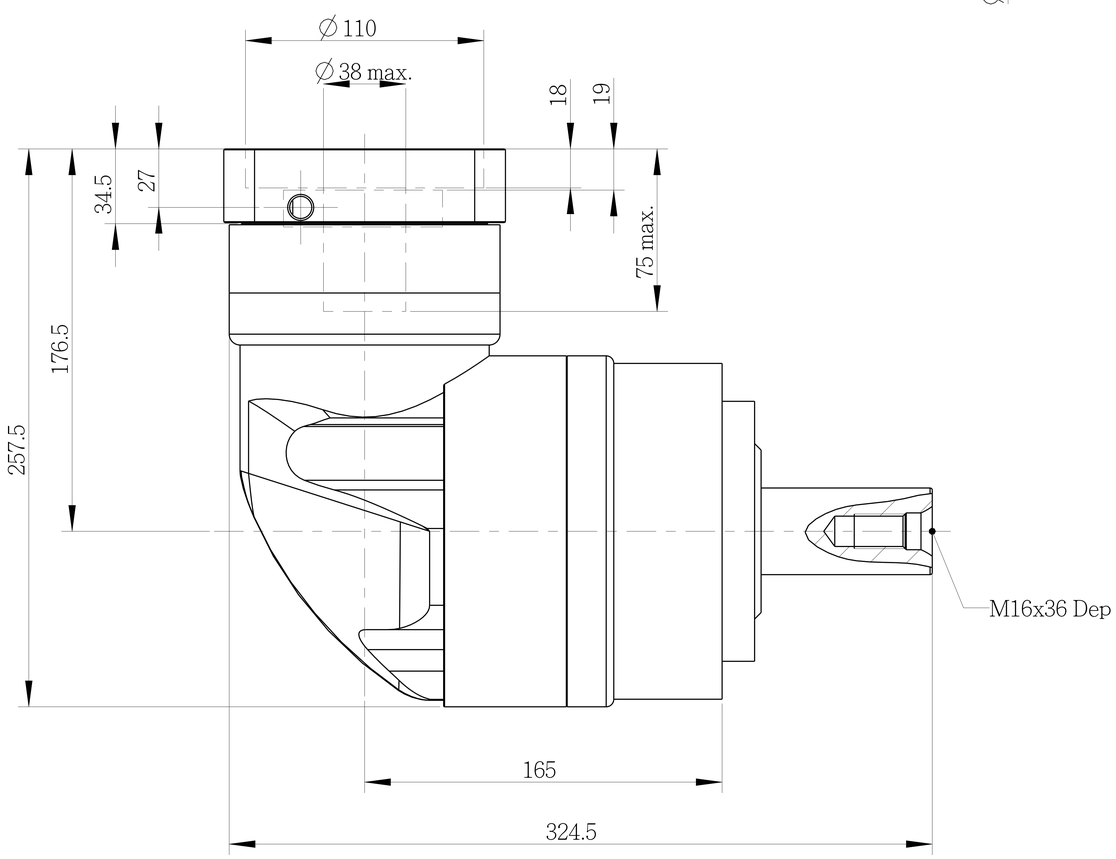

PART NO. AER1551-P0403500101 AER155-1, AD-P140-M130-1		APEX DYNAMICS, INC.
APPROVALS	DATE	TITLE AER-155 1 Stage AND MOTOR FLANGE MOUNTING
DRAWN Cindy		
CHECKED		DWG NO. AER1551-P0403500101
APPROVED		SIZE A0 / SCALE 1:1 / REV 1.0

AER155-005 / MITSUBISHI HC-SR102