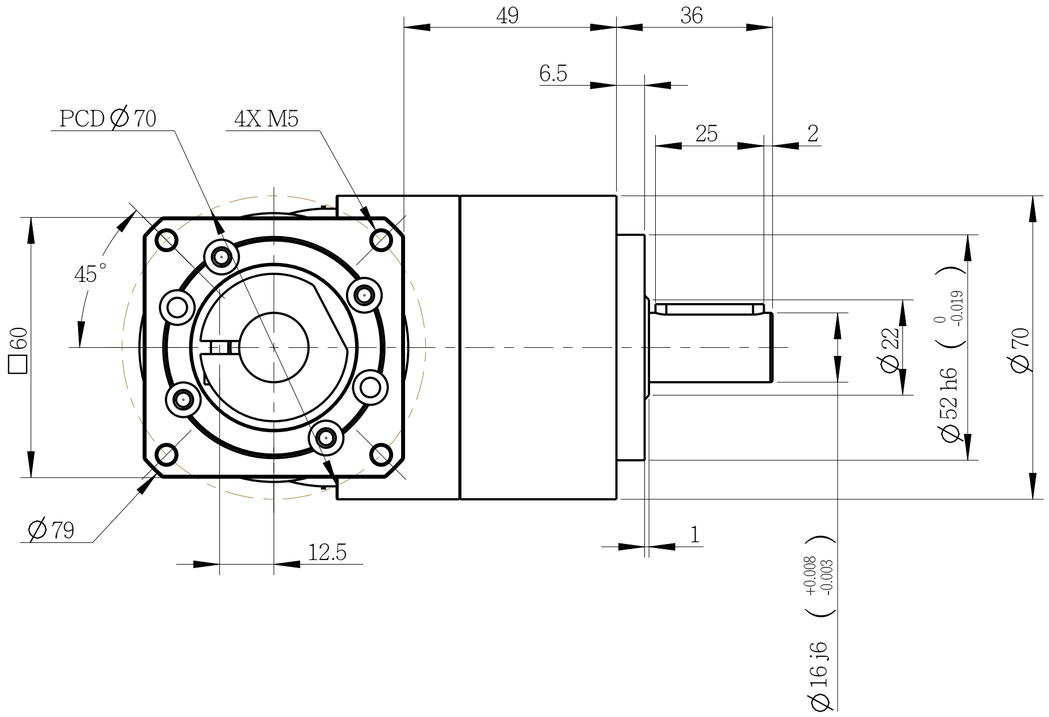

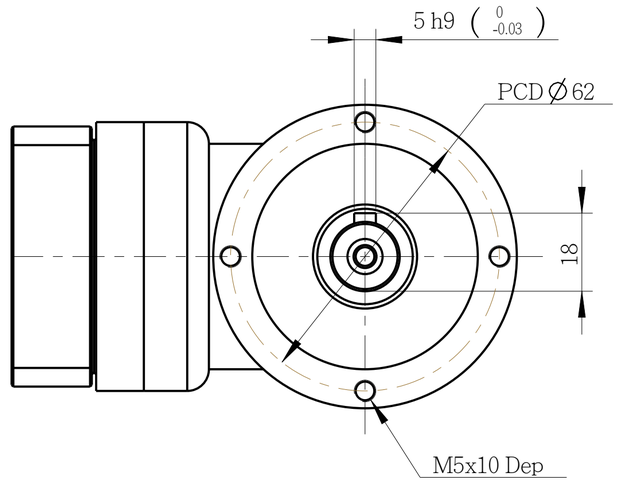

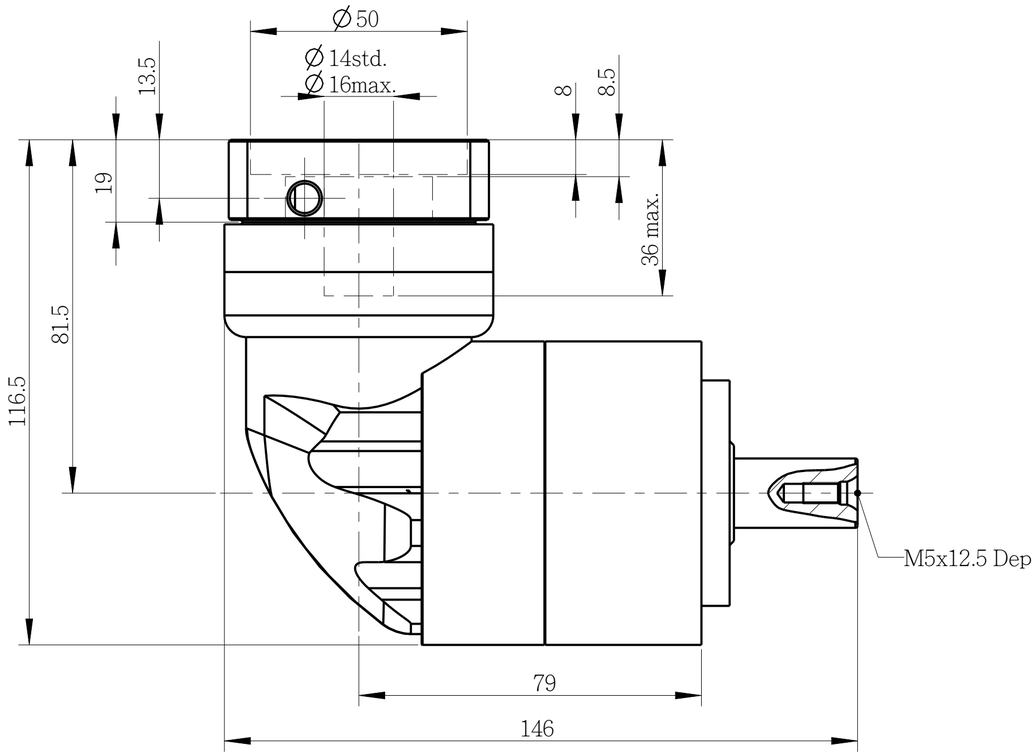

PART NO. AER0701-P0403200503 AER070-1, AD-P64-M60-3	APEX DYNAMICS, INC.
APPROVALS / DATE	TITLE AER-070 1 Stage AND MOTOR FLANGE MOUNTING
DRAWN Cindy	DWG NO. AER0701-P0403200503
CHECKED	
APPROVED	SIZE A2 / SCALE 1:1 / REV 1.0

AER070 - 003 / MITSUBISHI HG-KR23