NO	DESCRIPTION	MATERIAL	SIZE. DWG. NO	Q'TY	WT. (KG)		REMARK
					UNIT	TOTAL	

MOTOVARIO® 에이전트
HEART OF MOTION

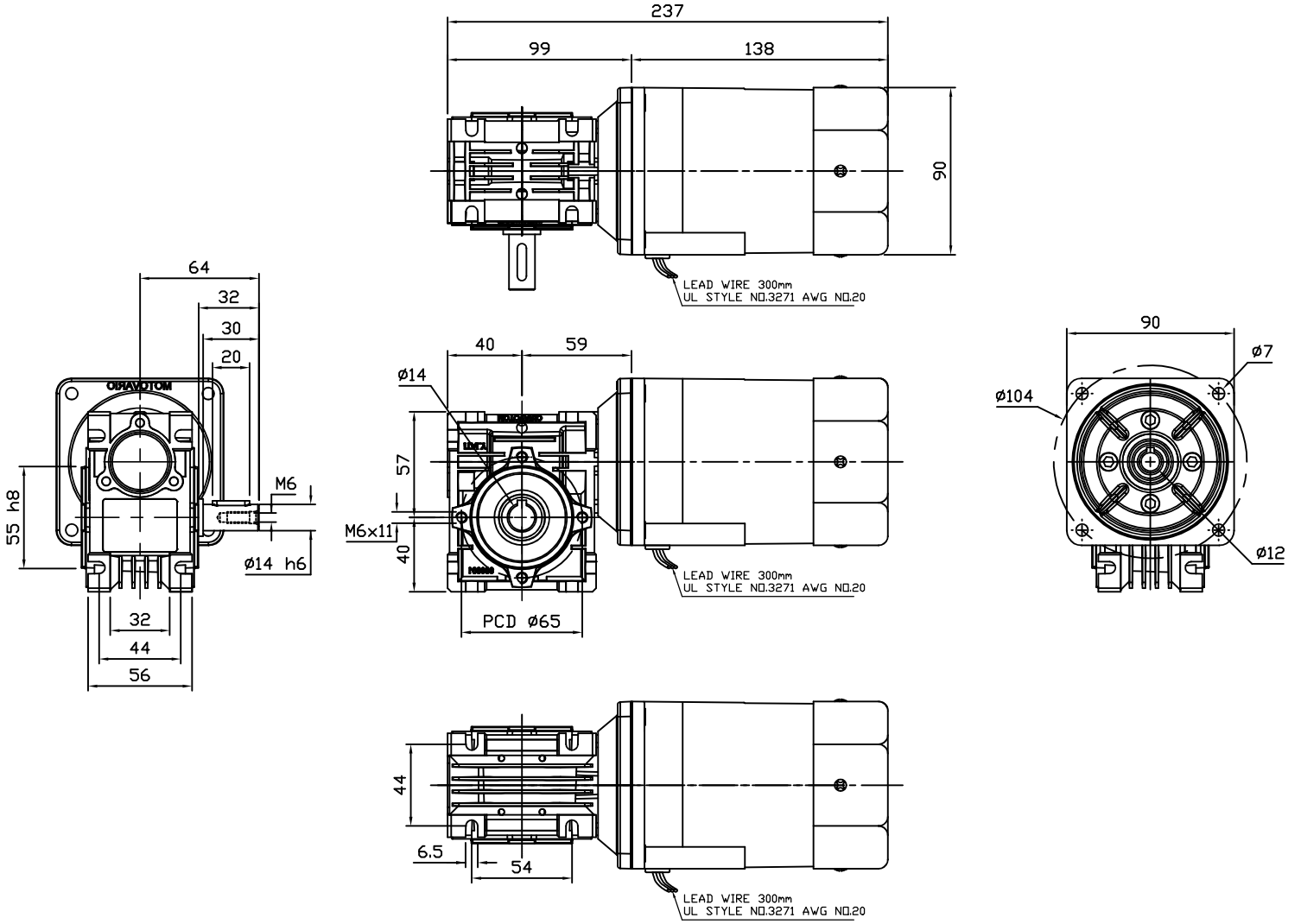

OUTPUT HOLLOW SHAFT

(주)한국체인모터
Tel. 032-810-0702 Fax. 815-8123

CUSTOMER APPROVE		AMEND			PROJECT		MOTOVARIO					
MECHANICAL	ELECTRICAL	△			MODEL		NMRV030_90각 90W DKM 인덕션					
		△			MODEL NUMBER		NMRV 030 90각/한축 + 9IDK□-90F (5~80:1)					
		△			DRAWN	LEE M.P	DATE		REV	A	SCALE	NONE
		△			CHECKED	KIM J.S	DATE		UNIT	MM	PAGE	-
		NO	CONTENT	DATE	APPROVED	LEE J.Y	DATE					