NO	DESCRIPTION	MATERIAL	SIZE. DWG. NO	Q'TY	WT. (KG) UNIT	WT. (KG) TOTAL	REMARK

MOTOVARIO® 에이전트
HEART OF MOTION

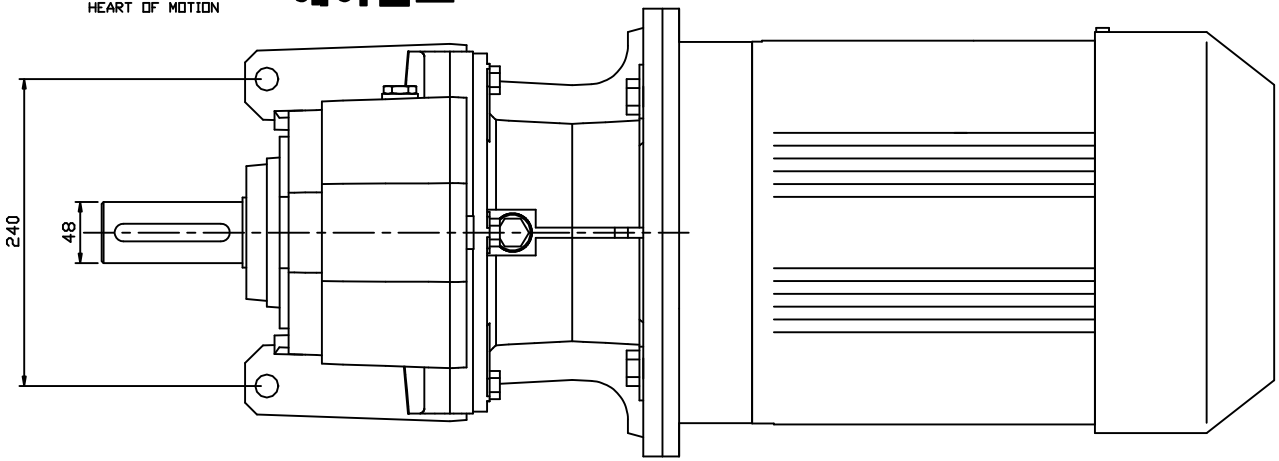

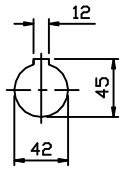

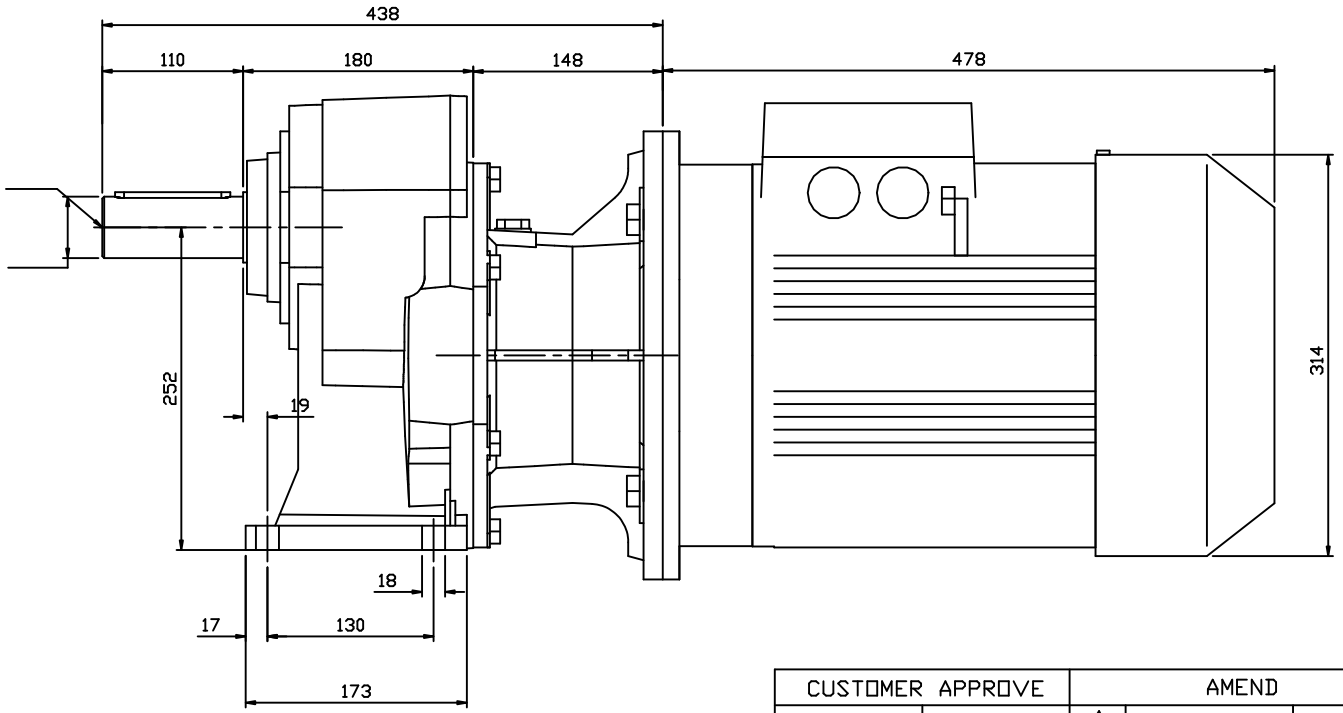

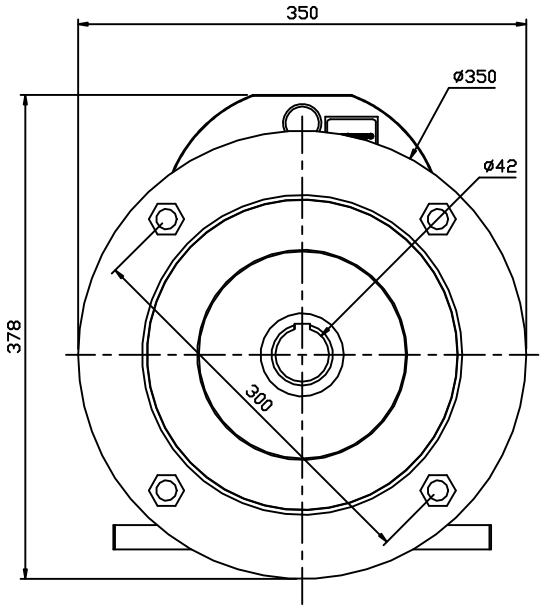

(주)한국체인모터
Tel. 032-810-0702 Fax. 815-8123

CUSTOMER APPROVE		AMEND			PROJECT		MOTOVARIO					
MECHANICAL	ELECTRICAL	△			MODEL		H101 160B5					
		△			MODEL NUMBER		HELICAL GEAR MOTOR					
		△			DRAWN	LEE M.P	DATE		REV	A	SCALE	NONE
		△			CHECKED	KIM J.S	DATE		UNIT	MM	PAGE	-
		NO	CONTENT	DATE	APPROVED	LEE J.Y	DATE					