표준 IE3 삼상 B5 - FF165 (80M-V02)	CODE No	

Model No	Out Put (kW)				Volt	Hz	IP	Ins cl.	Time	Bearing		Type
	2P	4P	6P	8P						DE	NDE	
		0.75					55	F	S1	6204ZZ	6203ZZ	TEFC

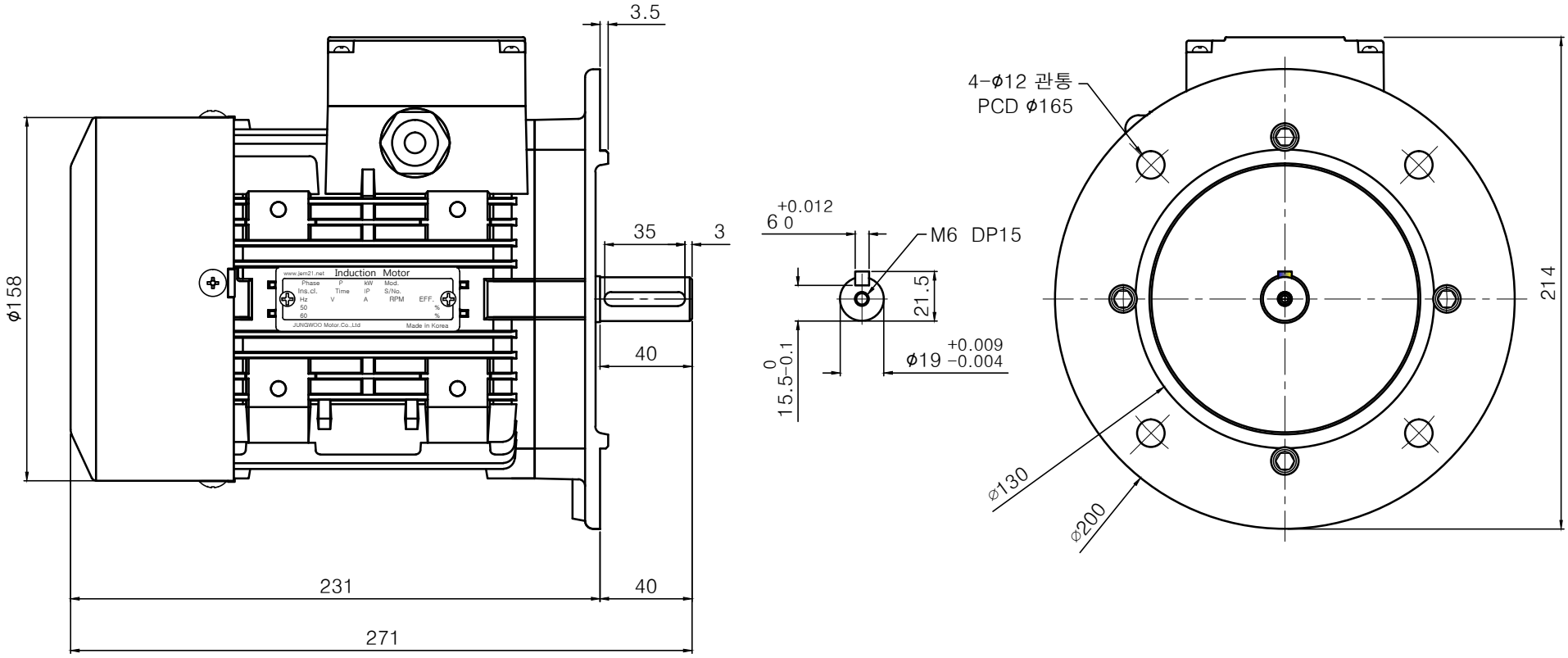

STYLE	3rd Angle	TITLE	Induction Motor Out Line
UNIT	MM		
SCALE	1 : 1.25	정우전기 (주)	
DATE	2023.07.03		
DSND BY	KOH.Y.K		