CUSTOMER

IE3 3Ø 18.5KW(25HP) 2P B5

No.	Description of Revision	Date	Name	Approval
1 X				

2023.02.06

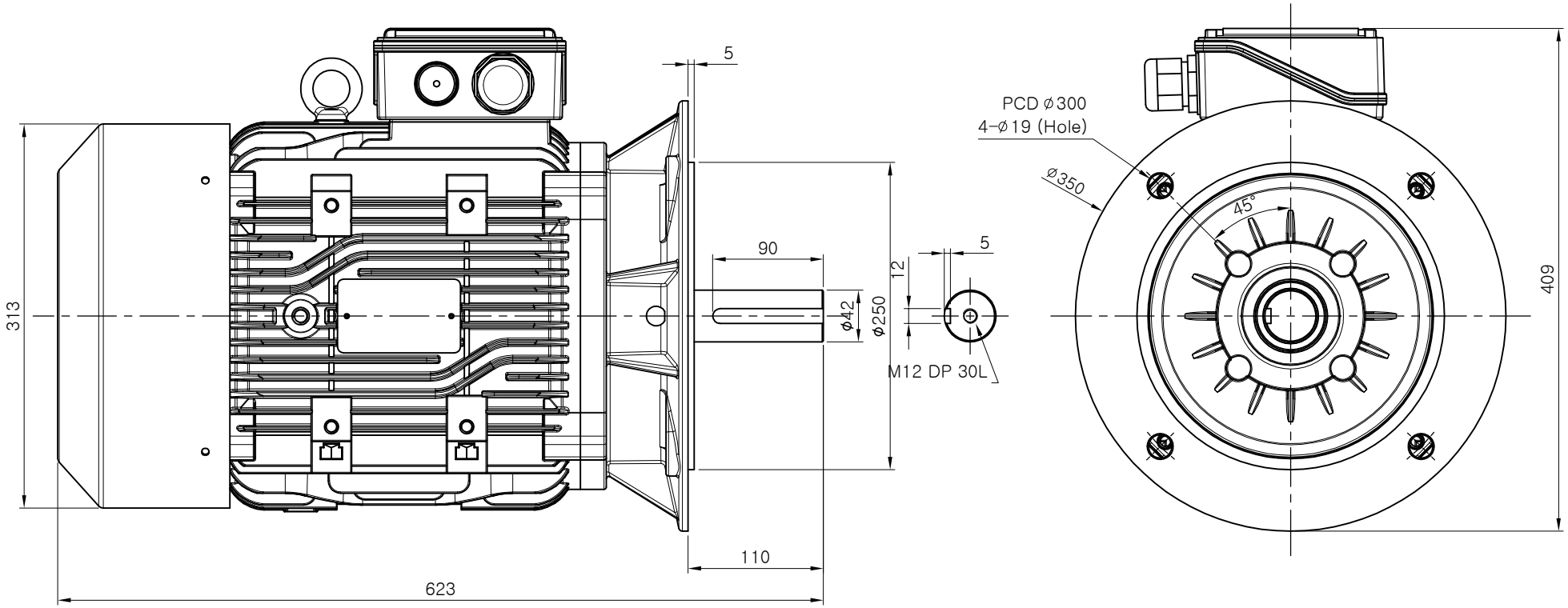

※ NOTE ※

1. 케이블 그랜드 : PG29

DRAWING	KIM S. C	DATE		3RD ANGLE PROJECTION	Title B5-3Ø 25HP 2P Premium
DESIGNED		2023.02.05			
CHECKED		SCALE	UNIT	SHEET 1 / 1	Drawing No. IE3 B5-325.02A
APPROVED		1/1	MM		
IK ELECTRIC CO., LTD.					Model No. IKM-1852P / REV. 0

This drawing contains information that is proprietary to IK Electric Co.,Ltd
And should not be used without written permission.

A4