No.	NAME	MATERIAL	DWG/MATL No.	CODE	Q'TY	SIZE	WEIGHT	REMARK
					0			

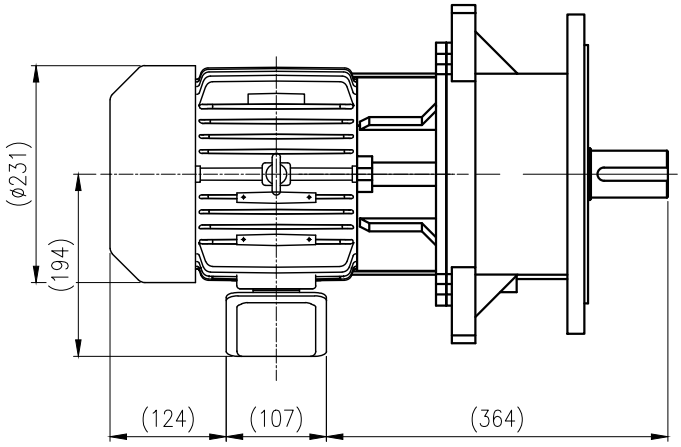

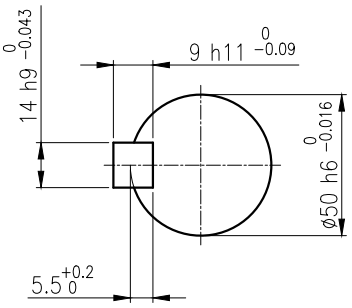

OUTPUT SHAFT

KEY 14 x 9 x 68

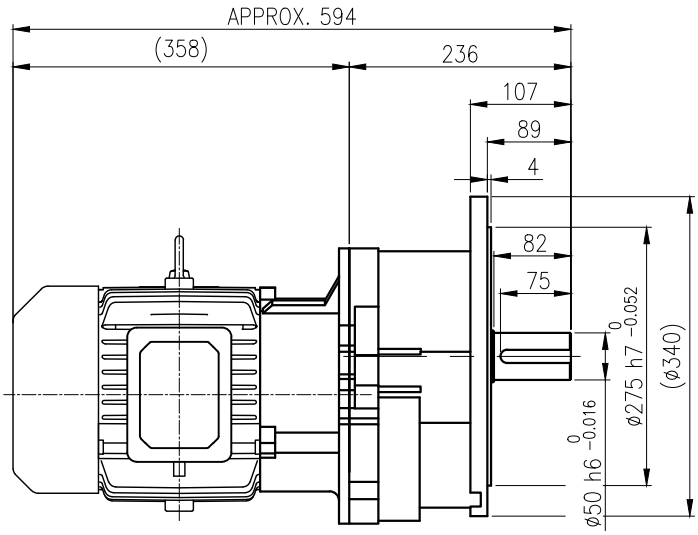

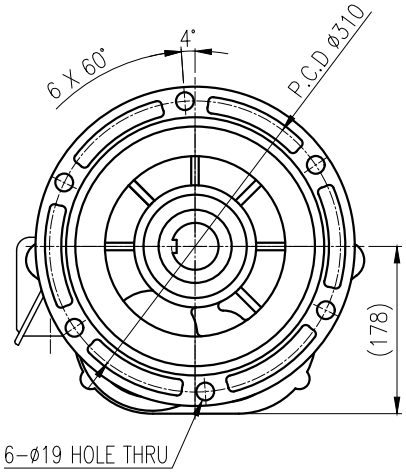

		BEARING		
		INPUT SHAFT	6206ZZ 6207ZZ	
OIL SEAL		2ND PINION	6206ZZ 6307ZZ	GREASE : NLGI(EP)00
MOTOR SHAFT	D(M) 35 x 47 x 7	3RD PINION	– –	ABOUT 3.5 kg
OUTPUT SHAFT	D(M) 55 x 78 x 12	OUTPUT SHAFT	PM3530 22211	WEIGHT 94 kg

No.	DATE	DESCRIPTION of REVISION

DWG NAME: 외형도 OUTLINE DIMENSION

DWG No.: EK2D007777H0001

UNIT: mm

SCALE: 1:1

DESIGNED	CHECKED	REVIEWED	APPROVED	DATE
2019.05.30	2019.05.30	2019.05.30	2019.05.30	2019-05-30
김민정	문병선	박희성	홍원철	

REVISION No. 01

THIRD ANGLE PROJECTION

A4(210X297mm) FORM CE-14-0100-4A4 2013.11.20

HYOSUNG HEAVY INDUSTRIES

TYPE: F1VM_18_3.7kW_25~30:1_프리미엄

REF. No.: –

A

The information written in this drawing is HYOSUNG HEAVY INDUSTRIES's property, and may not be disclosed and/or reproduced without the prior official permission of HYOSUNG HEAVY INDUSTRIES Corp.

이 도면상에 표시된 정보는 효성중공업(주)의 소유이며 당사의 사전 서면동의 없이 무단사용을 금합니다.