DWG. NO.

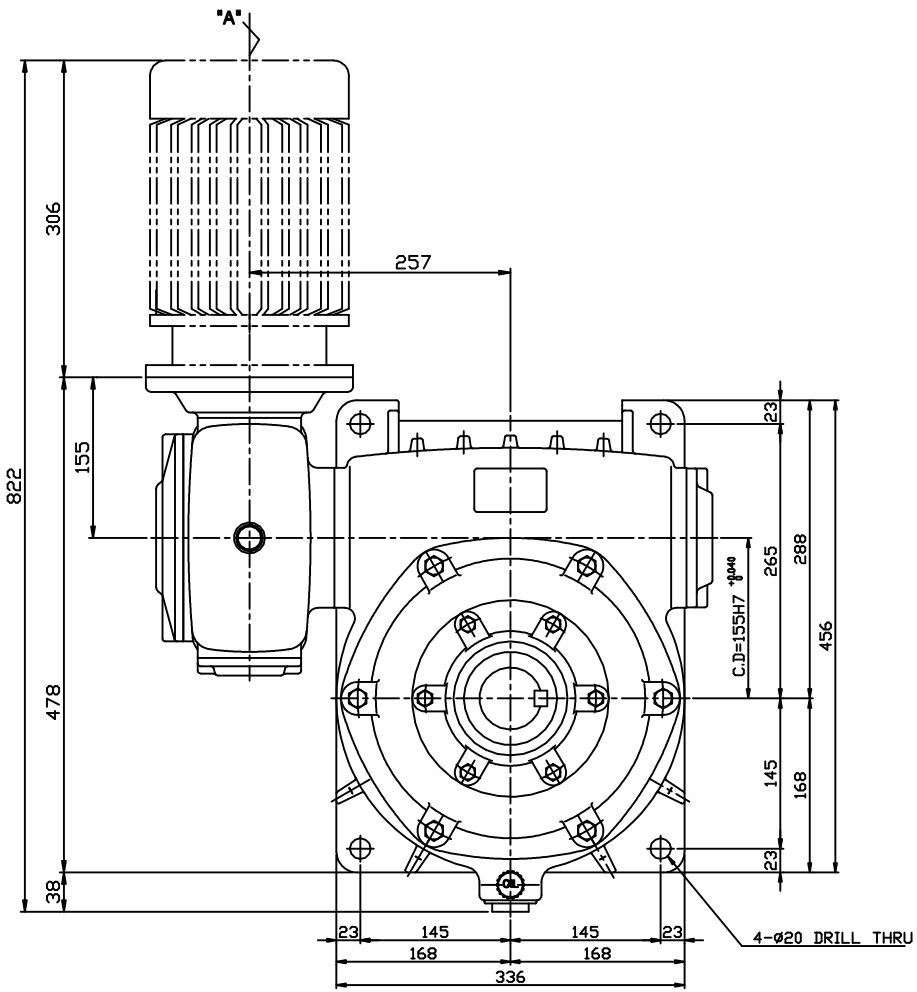


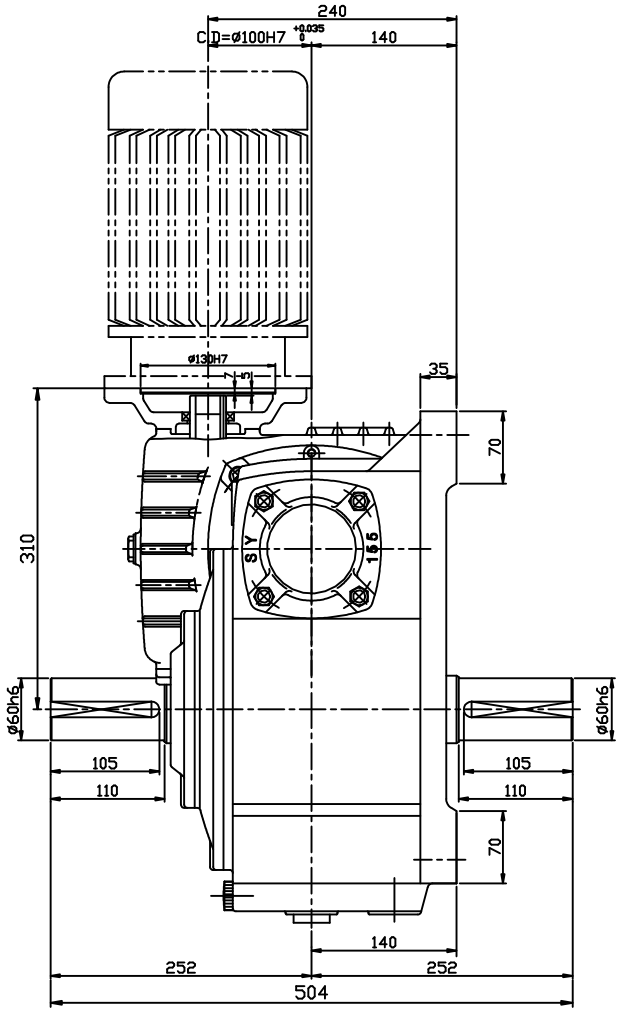


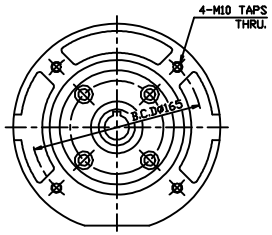


VIEW "A"

| |
|---|
| M5*0.8 |
| M6* 1 |
| M8*1.25 |
| M10*1.5 |
| M12*1.75 |
| M16* 2 |
| M18*2.5 |
| M20*2.5 |
| M22*2.5 |
| M24*3 |

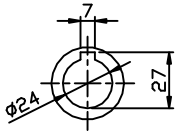


INPUT SHAFT

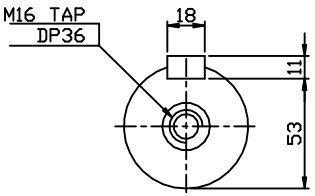


OUTPUT SHAFT

| NO | PART NO. | DESCRIPTION | Q'TY | MATERIAL |
|---|---|---|---|---|
| | | | | |

| | DATE | NAME |
|---|---|---|
| DESIGN | 99.10.06 | Y.N.KIM |
| CHECK | | |
| APPROV | | |

SAMYANG
REDUCTION GEARS CO., LTD

SCALE N/S

DWG SIZE A3

TITLE
**OUTLINE DWG.**
**MAX21 WORM REDUCER DWVM155**
**2HP i=1/500~1/900 F-TYPE**

DWG. NO.
**DWVM155-2F**

SHEET /

REV