DWG. NO.

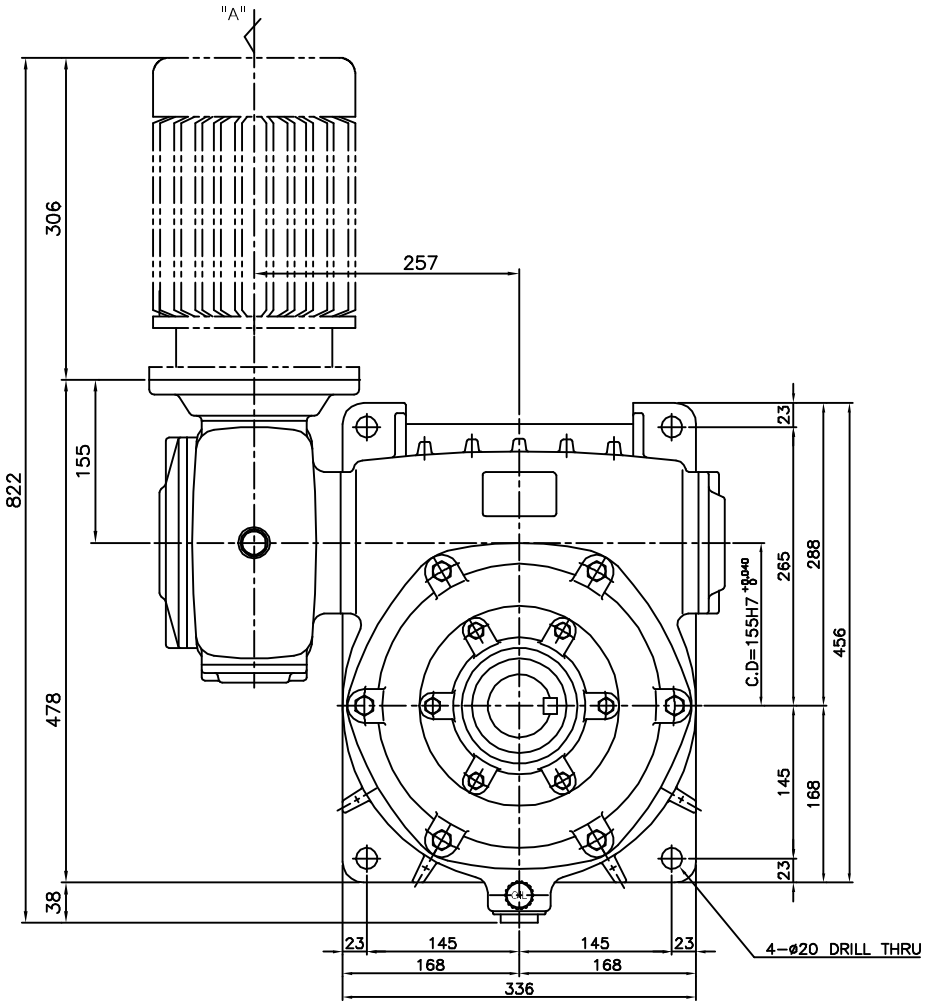

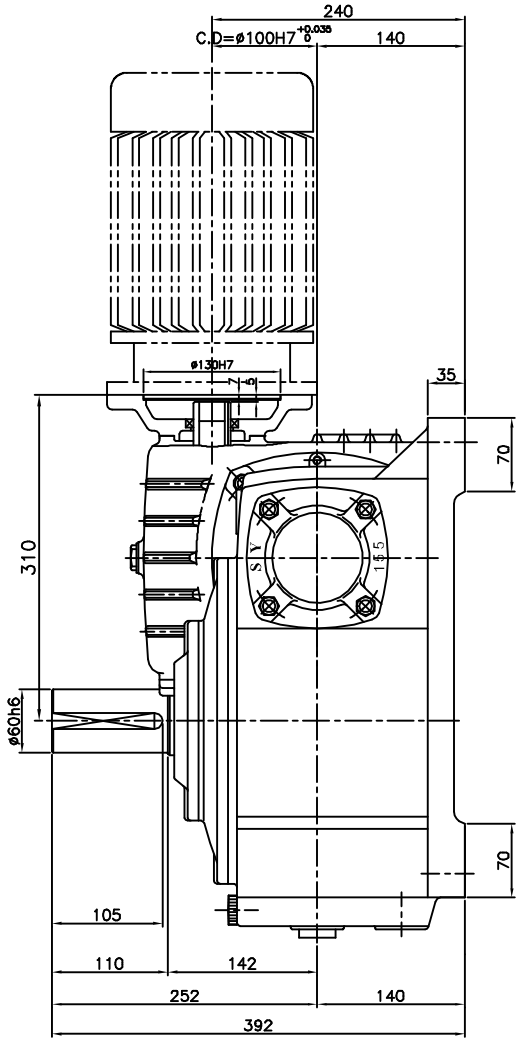

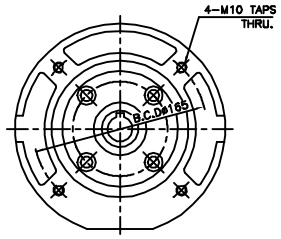

VIEW "A"

M5*0.8
M6* 1
M8*1.25
M10*1.5
M12*1.75
M16* 2
M18*2.5
M20*2.5
M22*2.5
M24*3

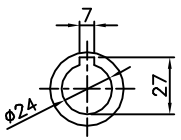

INPUT SHAFT

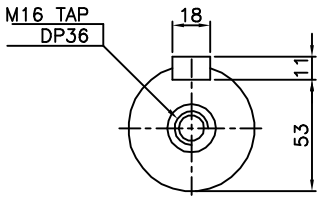

OUTPUT SHAFT

NO	PART NO.	DESCRIPTION	Q'TY	MATERIAL

	DATE	NAME	SCALE	TITLE	SHEET
DESIGN	99.10.06	Y.N.KIM	N/S	OUTLINE DWG. MAX21 WORM REDUCER DWVM155 2HP i=1/500~1/900 B-TYPE	/
CHECK					
APPROV					
SAMYANG REDUCTION GEARS CO., LTD.			DWG SIZE A3	DWG. NO. DWVM155-2D	REV