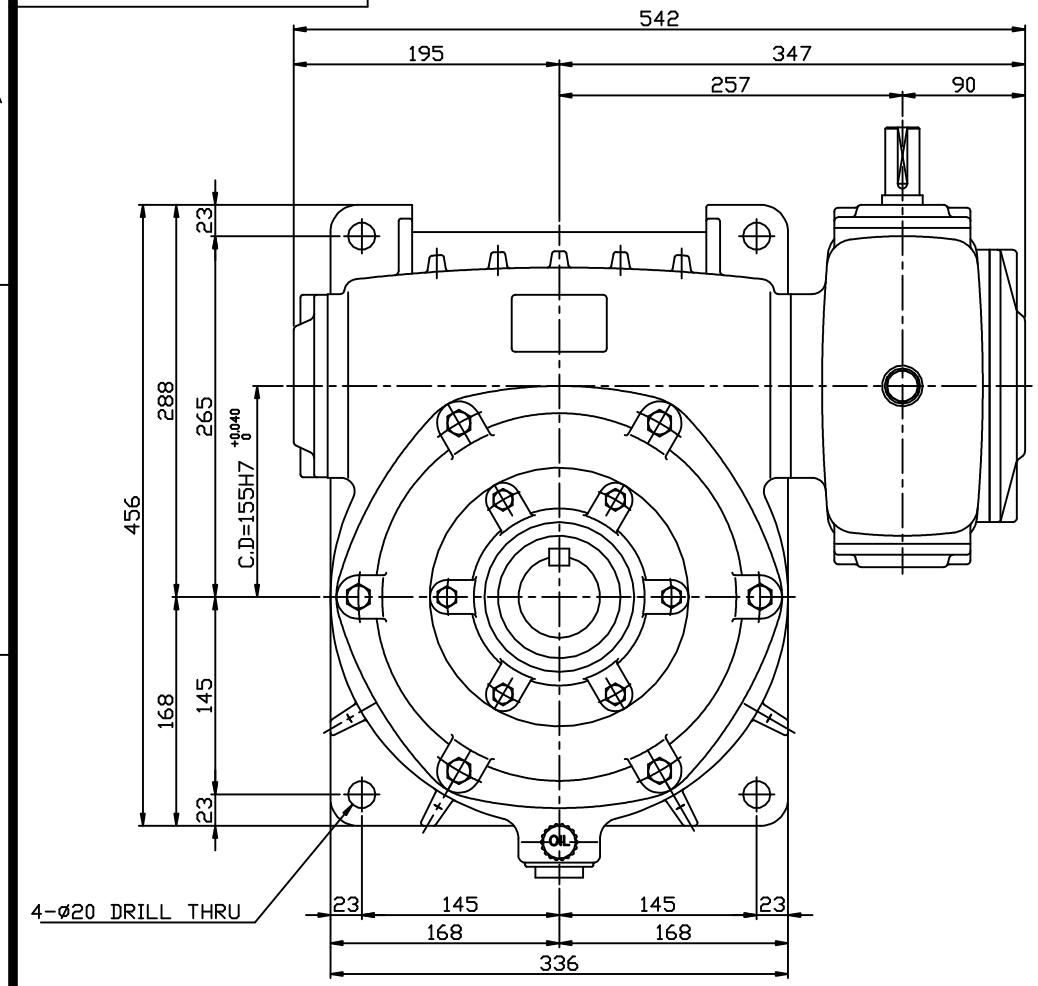

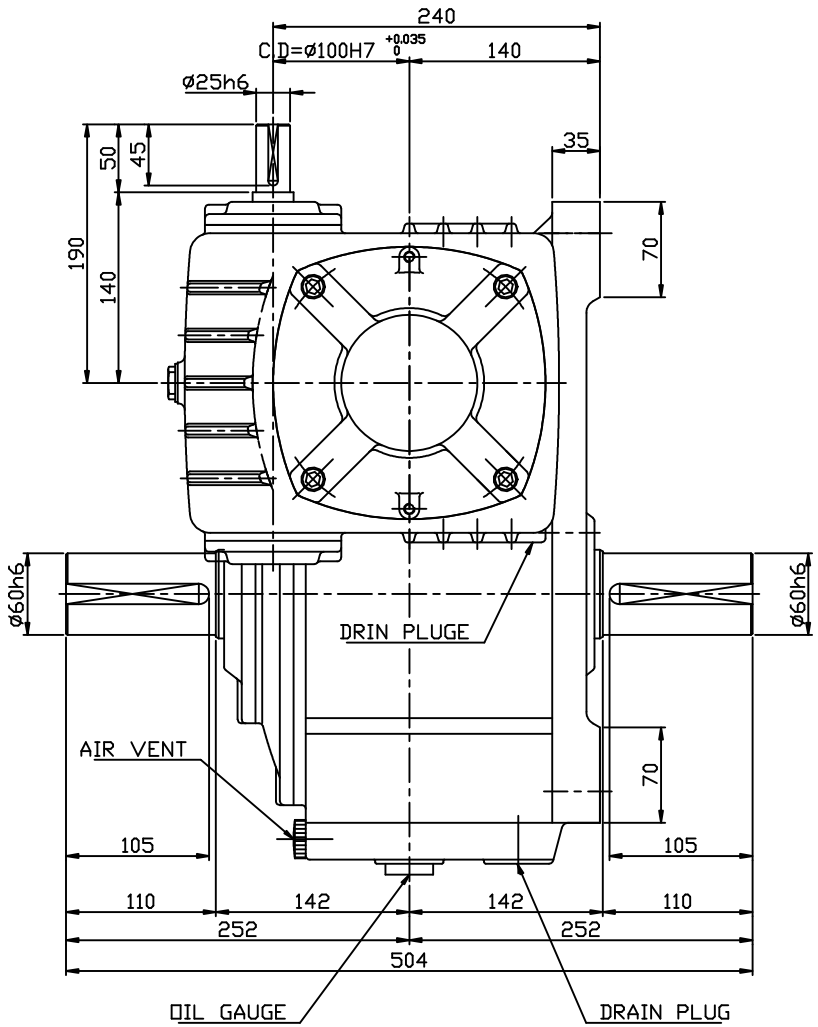

M5*0.8
M6* 1
M8*1.25
M10*1.5
M12*1.75
M16* 2
M18*2.5
M20*2.5
M22*2.5
M24*3

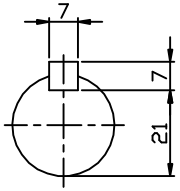

INPUT SHAFT

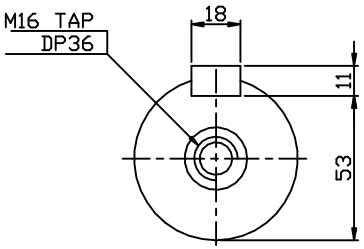

OUTPUT SHAFT

NO	PART NO.	DESCRIPTION	Q'TY	MATERIAL

	DATE	NAME
DESIGN	99.10.06	Y.N.KIM
CHECK		
APPROV		

SCALE N/S

TITLE **OUTLINE DWG.**
MAX21 WORM REDUCER DWV155
i=1/200~1/900 C-TYPE

SHEET /

SAMYANG
REDUCTION GEARS CO., LTD

DWG SIZE A3

DWG. NO. DWV155_C

REV