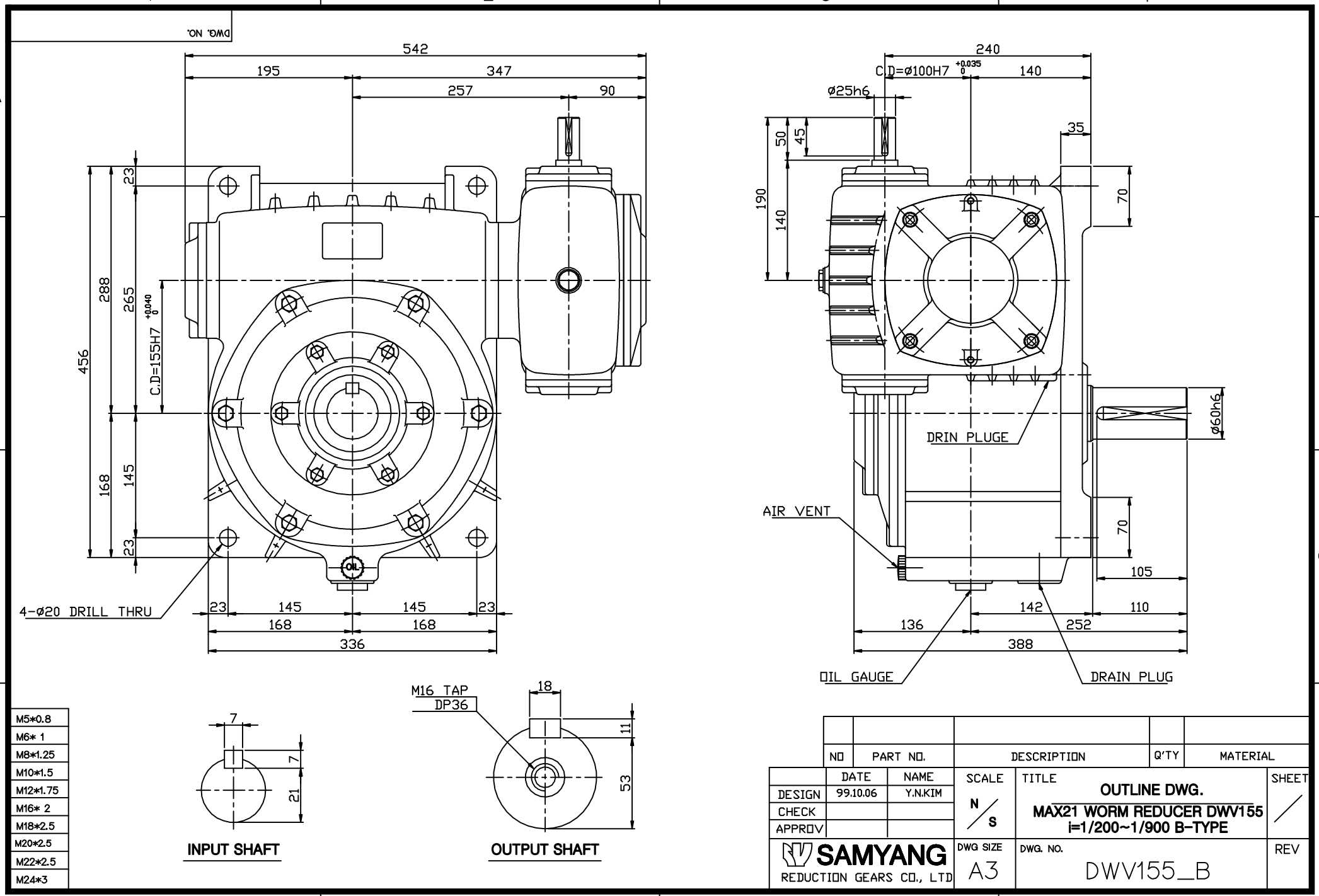
DWG. NO.
542
195
347
257
90
23
288
265
456
C.D=155H7 +0.040 0
168
145
23
4-Ø20 DRILL THRU
23
145
145
23
168
168
336
OIL
240
C.D=Ø100H7 +0.035 0
140
Ø25h6
50
45
35
190
140
70
Ø60h6
DRIN PLUGE
AIR VENT
70
105
142
110
136
252
388
OIL GAUGE
DRAIN PLUG
M16 TAP
DP36
18
11
53
7
7
21
INPUT SHAFT
OUTPUT SHAFT
M5*0.8
M6* 1
M8*1.25
M10*1.5
M12*1.75
M16* 2
M18*2.5
M20*2.5
M22*2.5
M24*3
NO
PART NO.
DESCRIPTION
Q'TY
MATERIAL
DATE
NAME
DESIGN
99.10.06
Y.N.KIM
CHECK
APPROV
SCALE
N/S
TITLE
OUTLINE DWG.
MAX21 WORM REDUCER DWV155
i=1/200~1/900 B-TYPE
SHEET
SAMYANG
REDUCTION GEARS CO., LTD
DWG SIZE
A3
DWG. NO.
DWV155_B
REV