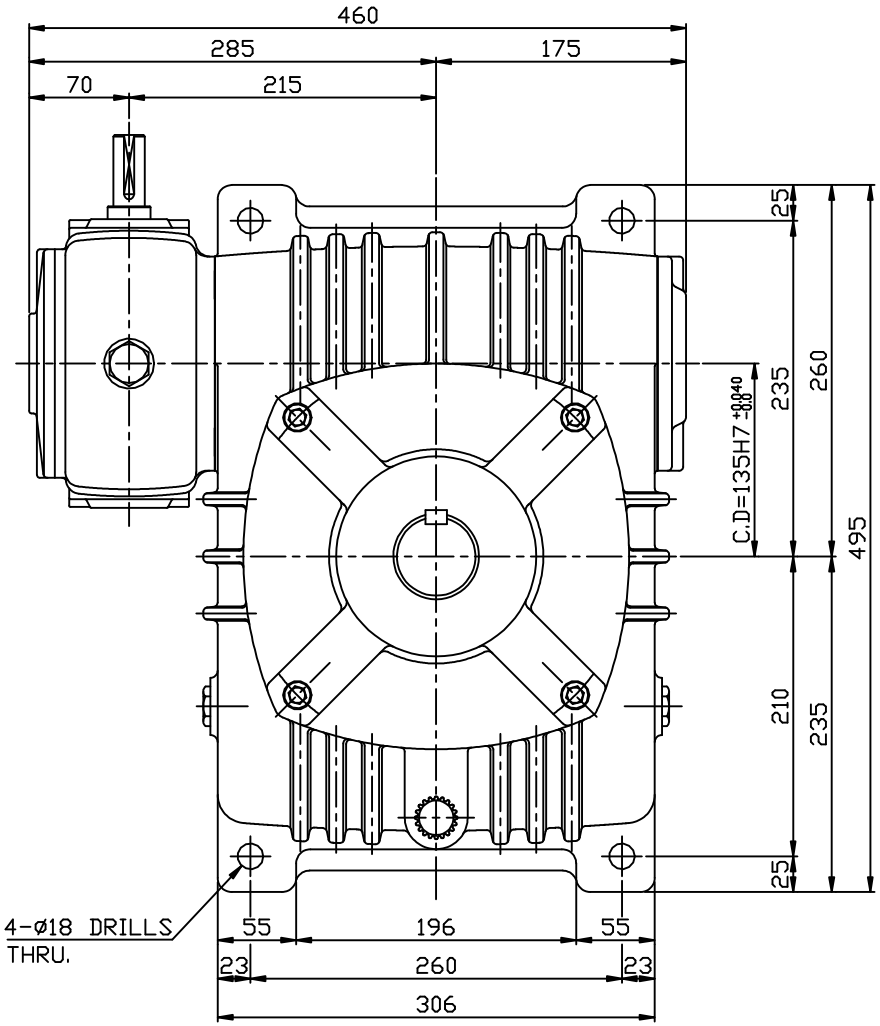


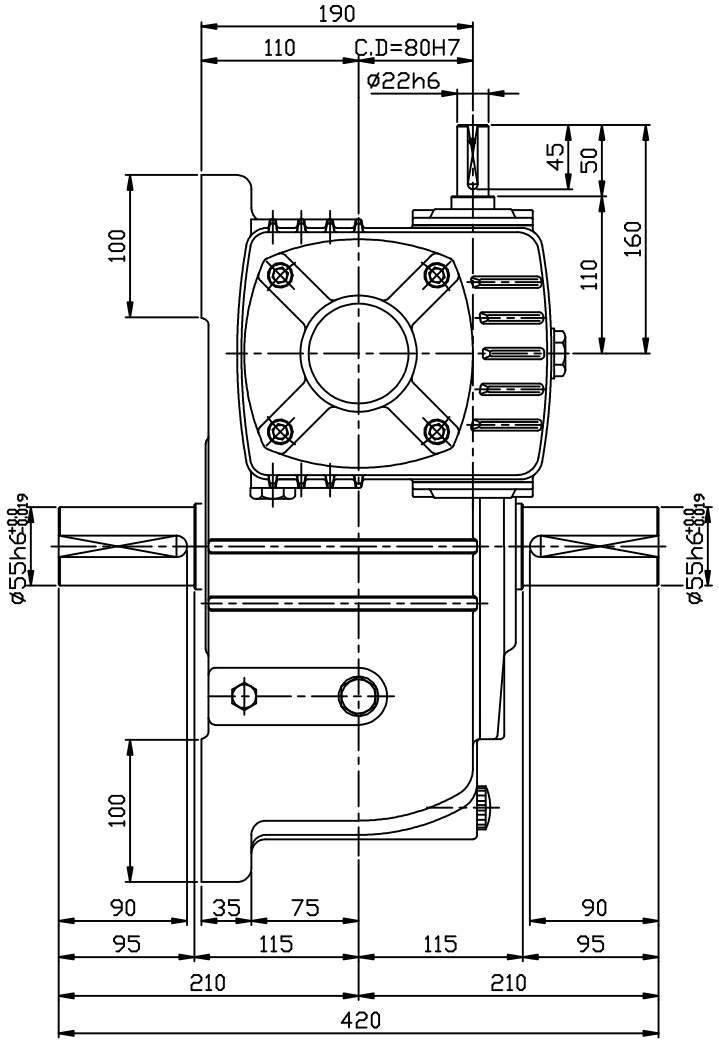


| |
|---|
| M5*0.8 |
| M6* 1 |
| M8*1.25 |
| M10*1.5 |
| M12*1.75 |
| M16* 2 |
| M18*2.5 |
| M20*2.5 |
| M22*2.5 |
| M24*3 |

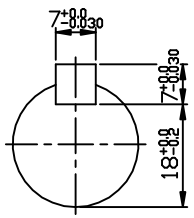


INPUT SHAFT

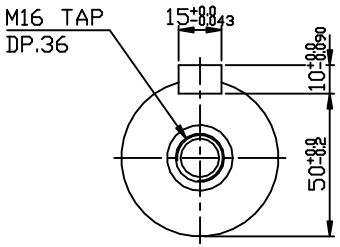


OUTPUT SHAFT

| NO. | REVISION | DATE | NAME |
|---|---|---|---|
| | | | |
| | | | |
| | | | |
| | | | |
| | | | |

| NO | DESCRIPTION | MAT'S | Q'TY | SIZE |
|---|---|---|---|---|

| | DATE | NAME |
|---|---|---|
| DESIGN | | |
| CHECK | | |
| APPROV | | |

SAMYANG
REDUCTION GEAR CO., LTD.

TITLE
OUTLINE DWG.
MAX21 WORM REDUCER DWV135
i=1/200~1/900 F-TYPE

SCALE N/S

DWV135_F

SHEET /