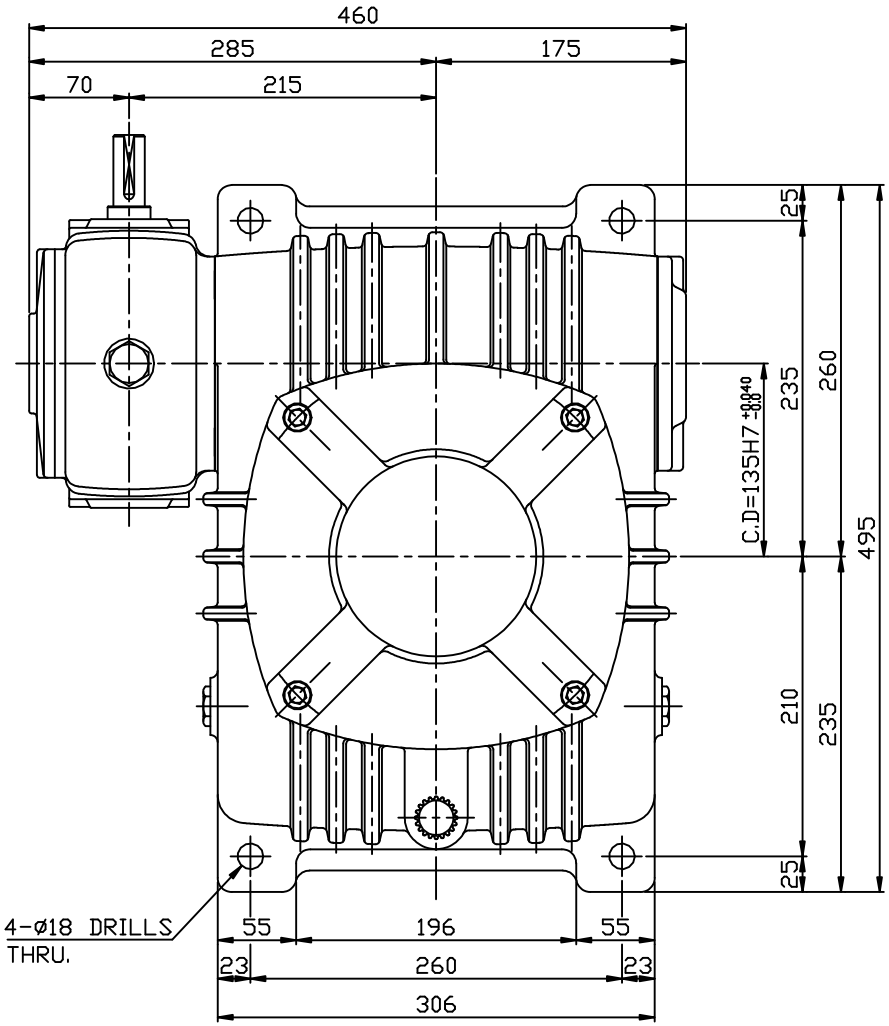

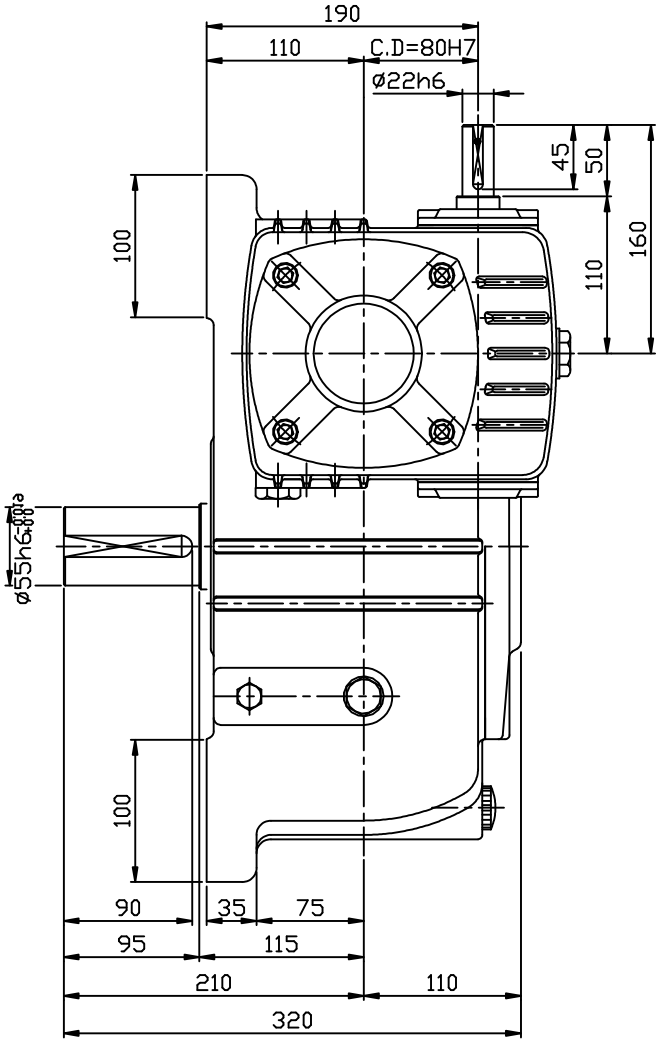

M5*0.8
M6* 1
M8*1.25
M10*1.5
M12*1.75
M16* 2
M18*2.5
M20*2.5
M22*2.5
M24*3

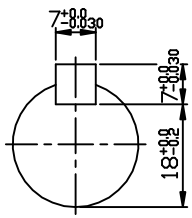

INPUT SHAFT

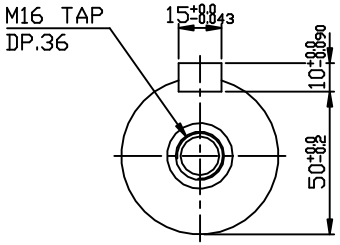

OUTPUT SHAFT

NO.	REVISION	DATE	NAME

NO	DESCRIPTION	MAT'S	Q'TY	SIZE

	DATE	NAME
DESIGN		
CHECK		
APPROV		

SAMYANG
REDUCTION GEAR CO., LTD.

TITLE
OUTLINE DWG.
MAX21 WORM REDUCER DWV135
i=1/200~1/900 E-TYPE

SCALE N/S

DWV135_E

SHEET /