| REV | ZONE | DESCRIPTION | DRAWN | APPRVD | DATE |
|---|---|---|---|---|---|
| | | | | | |
| | | | | | |

DWG. NO.

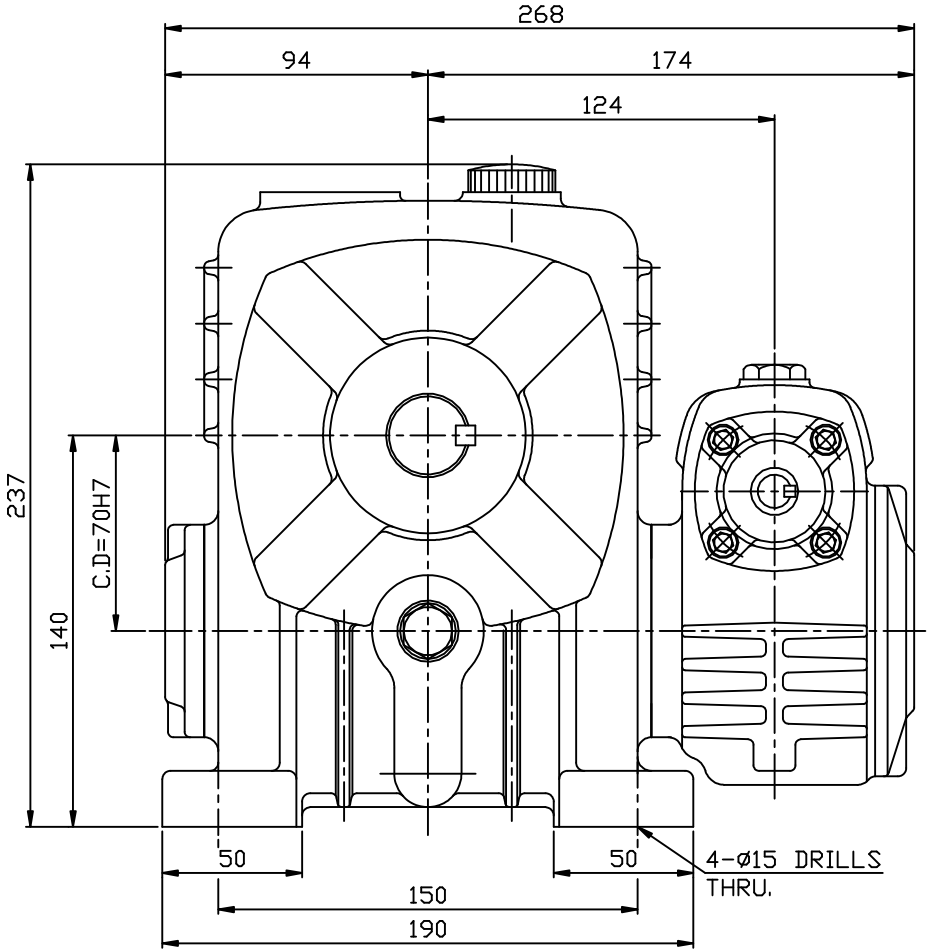


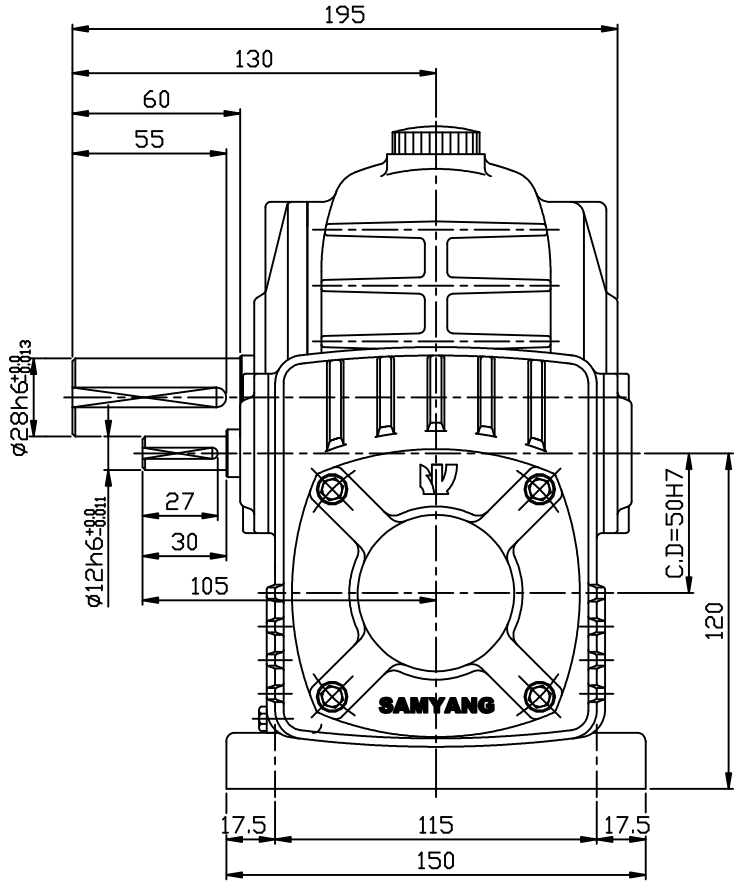


| |
|---|
| M5*0.8 |
| M6* 1 |
| M8*1.25 |
| M10*1.5 |
| M12*1.75 |
| M16* 2 |
| M18*2.5 |
| M20*2.5 |
| M22*2.5 |
| M24*3 |

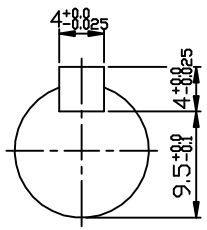


INPUT SHAFT

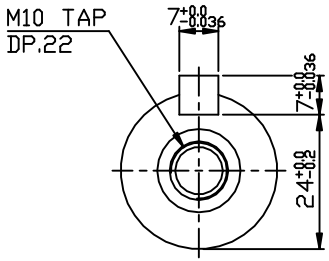


OUTPUT SHAFT

| NO | PART NO. | DESCRIPTION | Q'TY | MATERIAL |
|---|---|---|---|---|
| | | | | |

| | DATE | NAME | SCALE | TITLE | SHEET |
|---|---|---|---|---|---|
| DESIGN | | | 1/2 | OUTLINE DWG. MAX21 WORM REDUCER DWB70 i=1/200~1/900 D-TYPE | 1/1 |
| CHECK | | | | | |
| APPROV | | | | | |

SAMYANG REDUCTION GEARS CO., LTD

DWG SIZE: A3

DWG. NO.: DWB70_d

REV