DWG. NO.

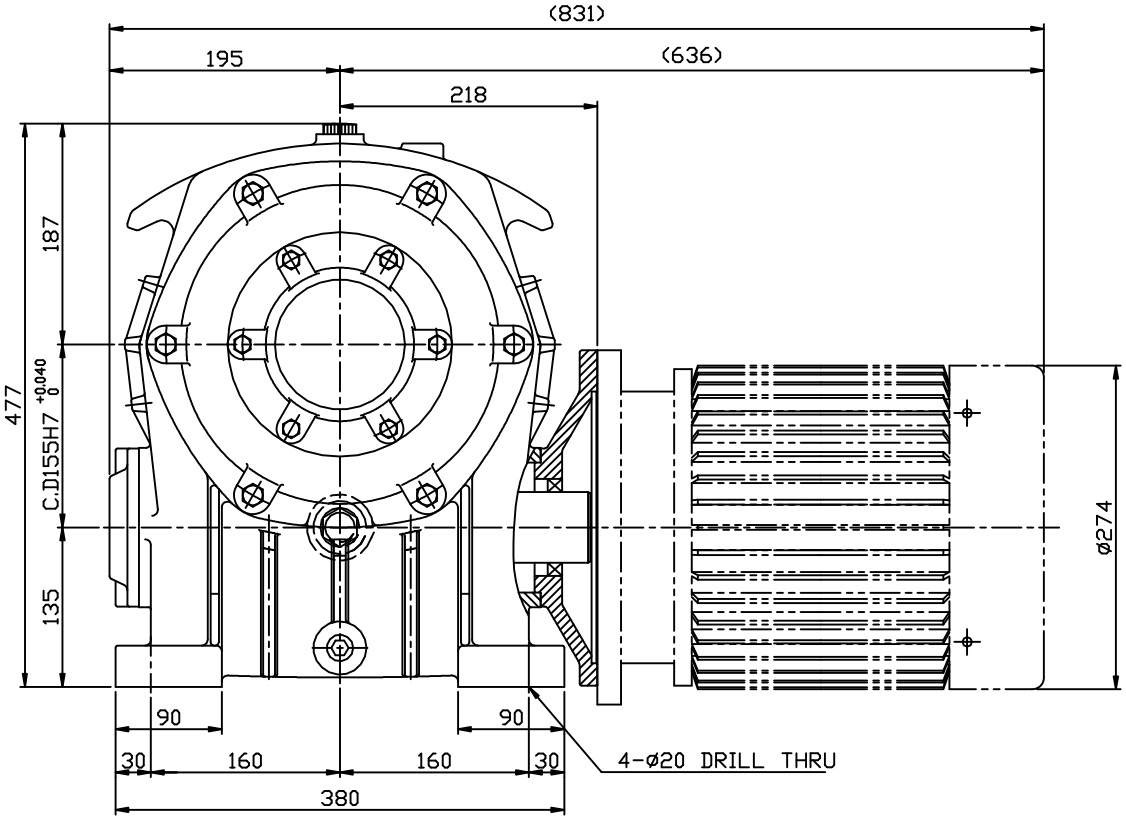

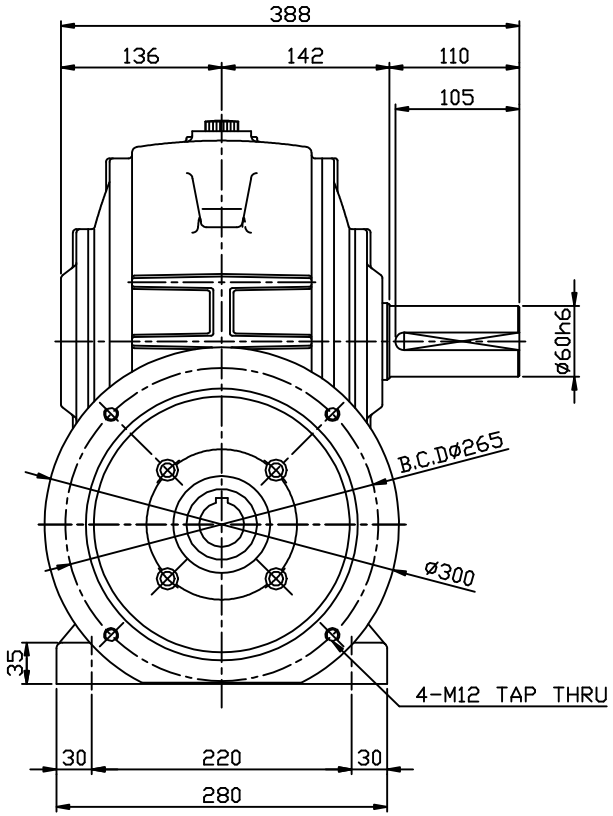

M5*0.8
M6* 1
M8*1.25
M10*1.5
M12*1.75
M16* 2
M18*2.5
M20*2.5
M22*2.5
M24*3

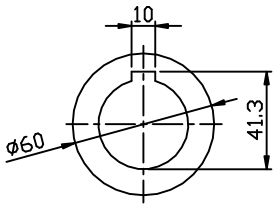

INPUT SHAFT

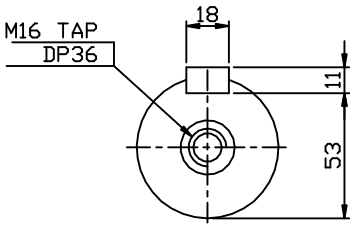

OUTPUT SHAFT

NO	PART NO.	DESCRIPTION	Q'TY	MATERIAL

	DATE	NAME
DESIGN	99.10.06	Y.N.KIM
CHECK		
APPROV		

SAMYANG
REDUCTION GEARS CO., LTD

SCALE: N/S

DWG SIZE: A3

TITLE: OUTLINE DWG
MAX21 WORM REDUCER WBM155
10HP i=1/10~1/30 A-TYPE

DWG. NO.: WBM155_10A

SHEET: /

REV