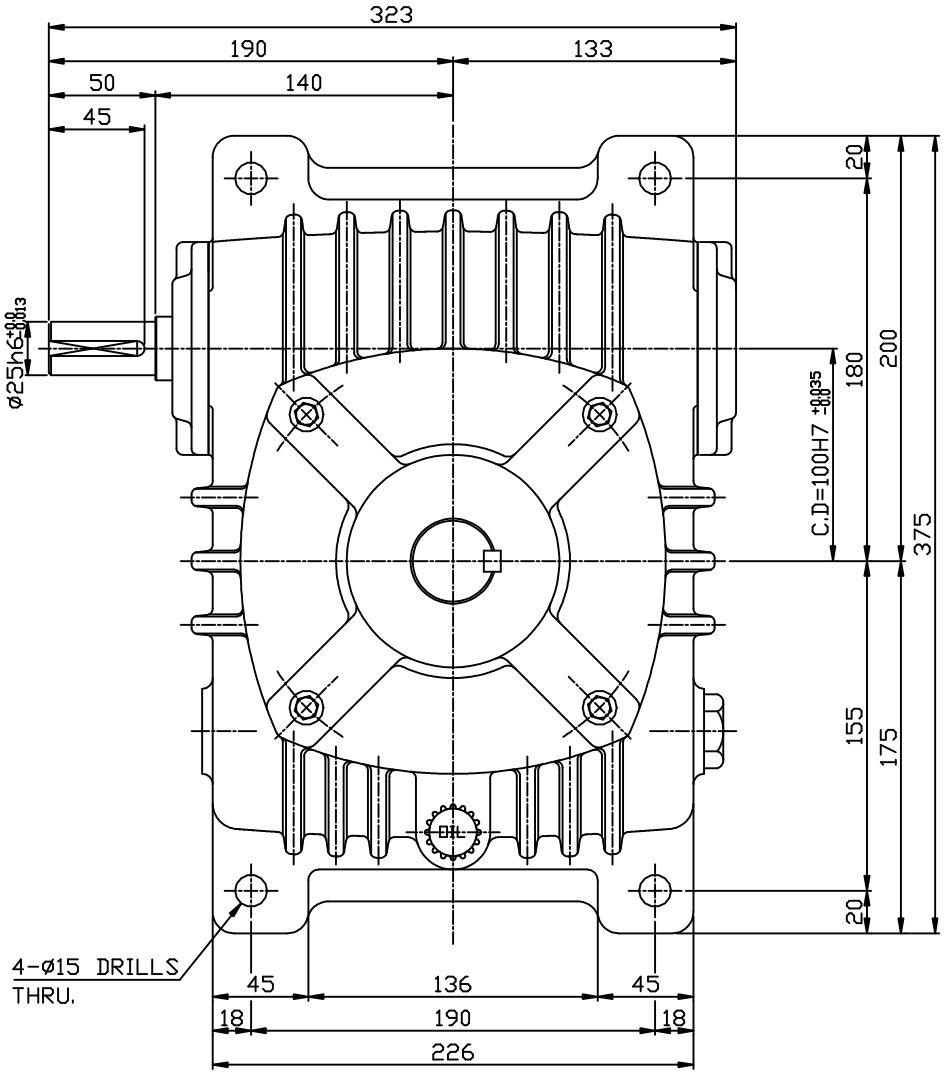

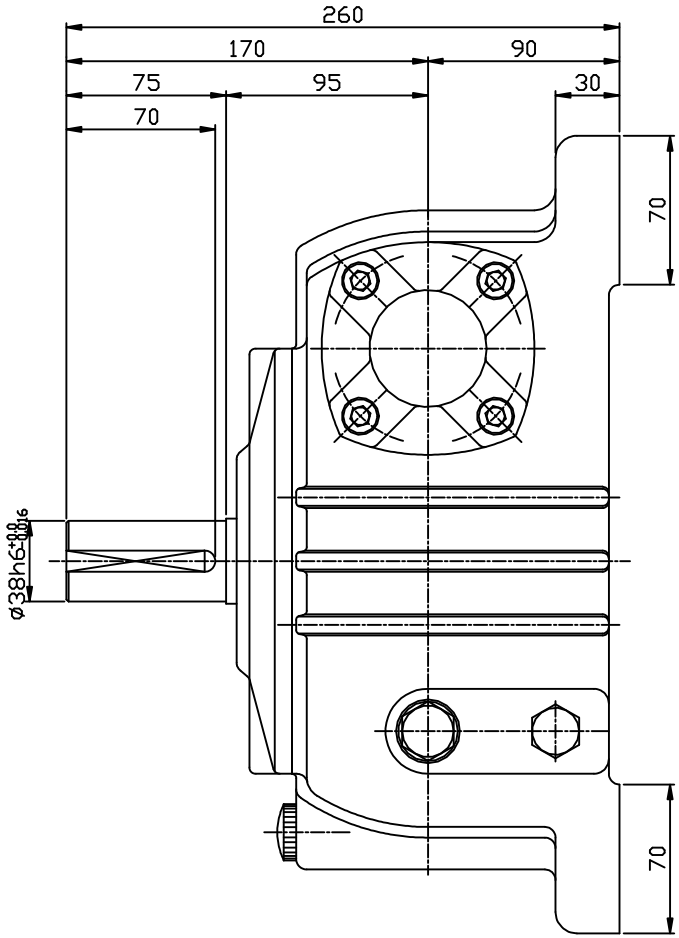

M5*0.8
M6* 1
M8*1.25
M10*1.5
M12*1.75
M16* 2
M18*2.5
M20*2.5
M22*2.5
M24*3

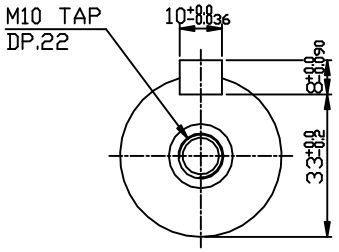

OUTPUT SHAFT

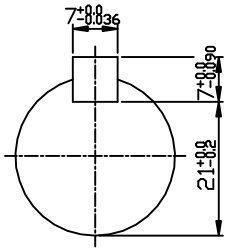

INPUT SHAFT

NO.	REVISION	DATE	NAME

	DATE	NAME
DESIGN		
CHECK		
APPROV		

SAMYANG
REDUCTION GEAR CO., LTD.

TITLE OUTLINE DWG.
MAX21 WORM REDUCER WV100
i=1/10~1/60 D-TYPE

WV100_D

SCALE N/S

SHEET /