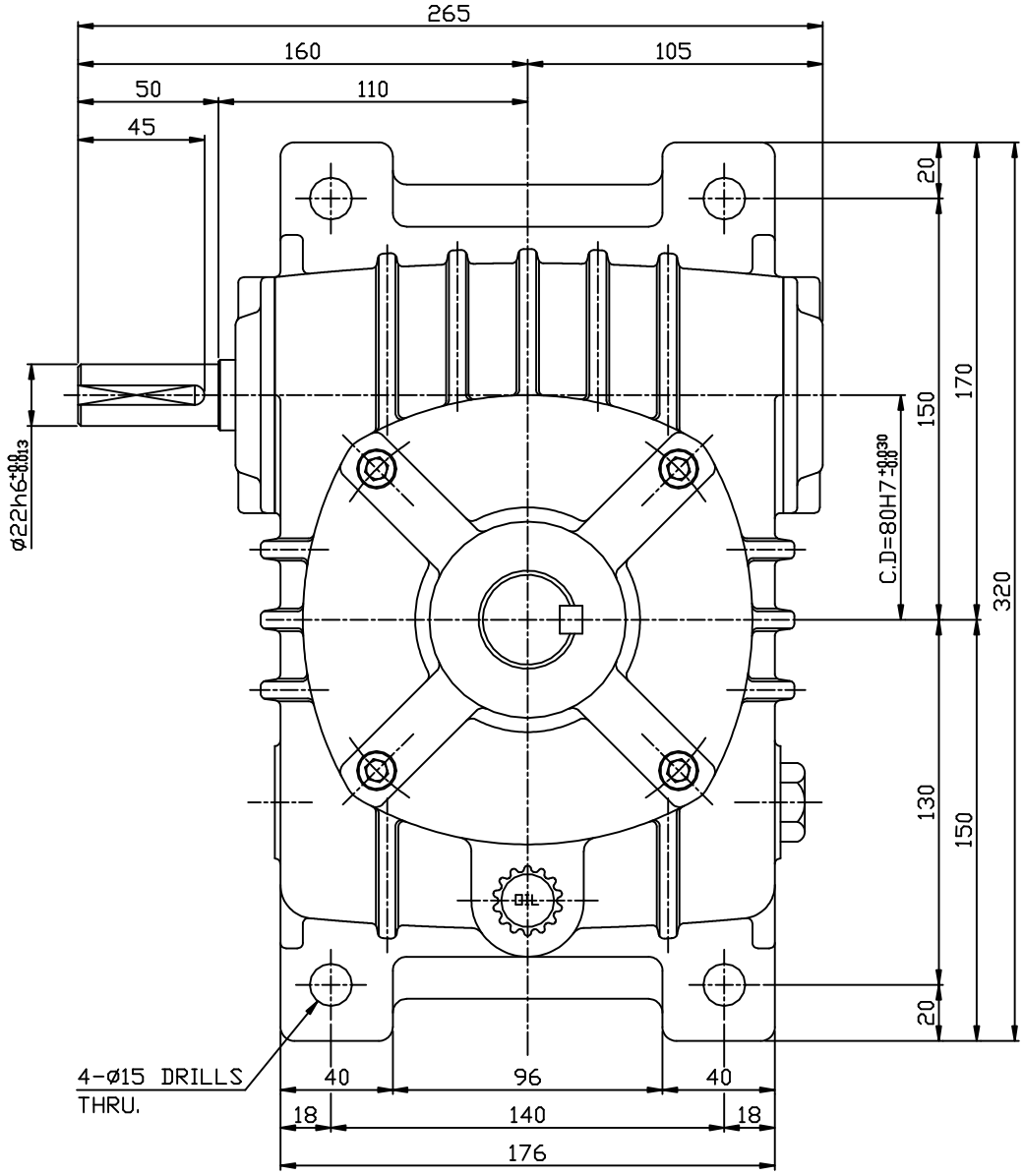

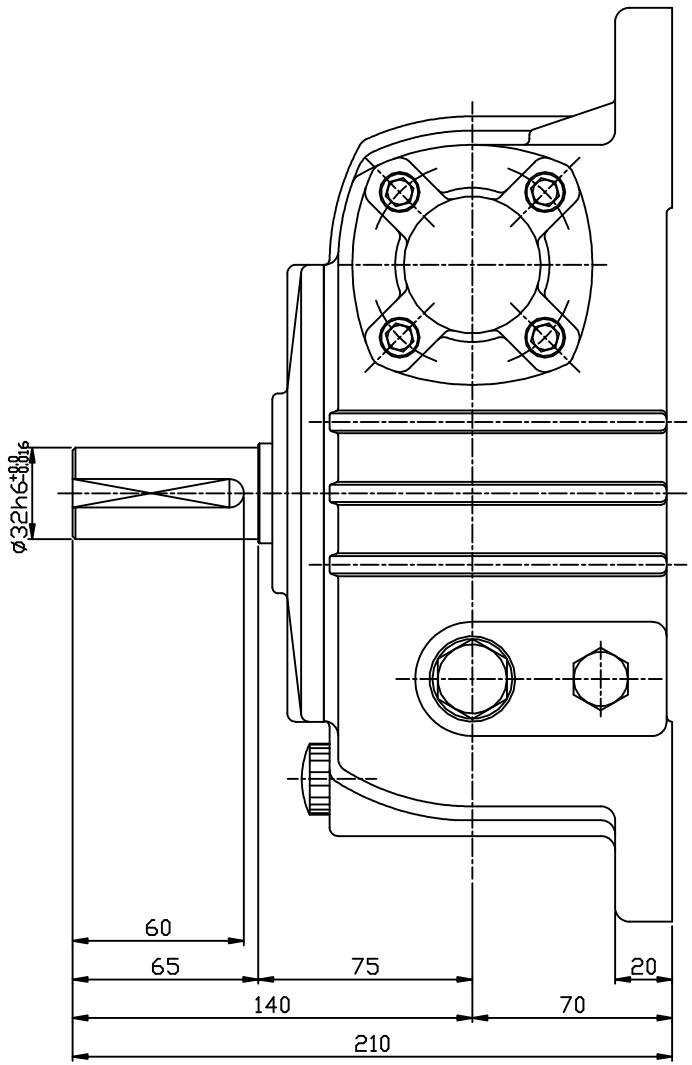

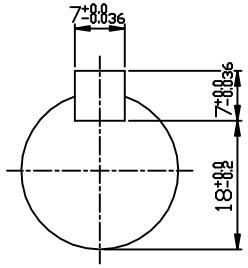

INPUT SHAFT

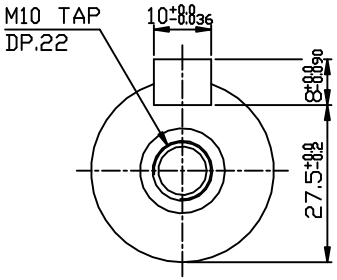

OUTPUT SHAFT

	DATE	NAME
DESIGN		
CHECK		
APPROV		

SAMYANG
REDUCTION GEAR CO., LTD.

TITLE OUTLINE DWG.
MAX21 WORM REDUCER WV80
i=1/10~1/60 D-TYPE

WV80_D

SCALE 1/1

SHEET /

M5=0.8
M6= 1
M8=1.25
M10=1.5
M12=1.75
M16= 2
M18=2.5
M20=2.5
M22=2.5
M24=3