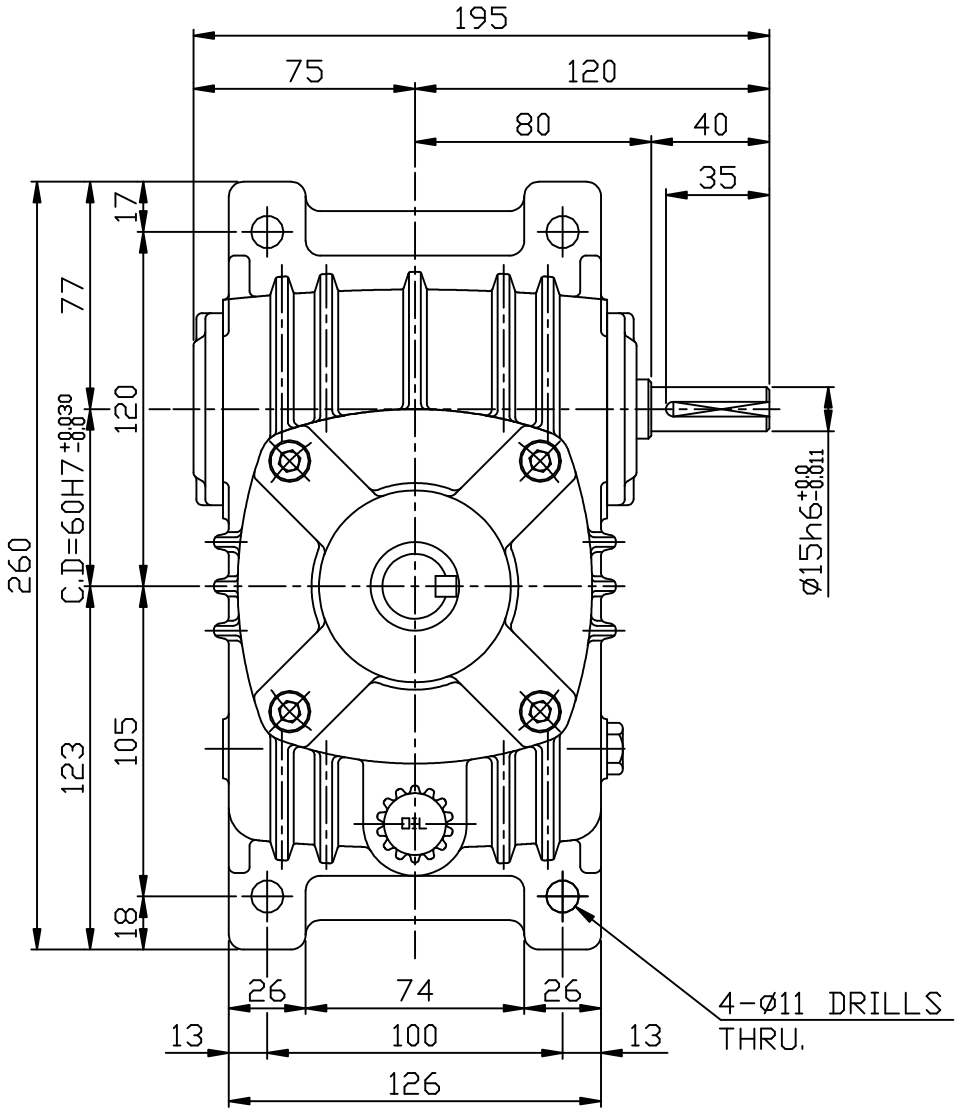


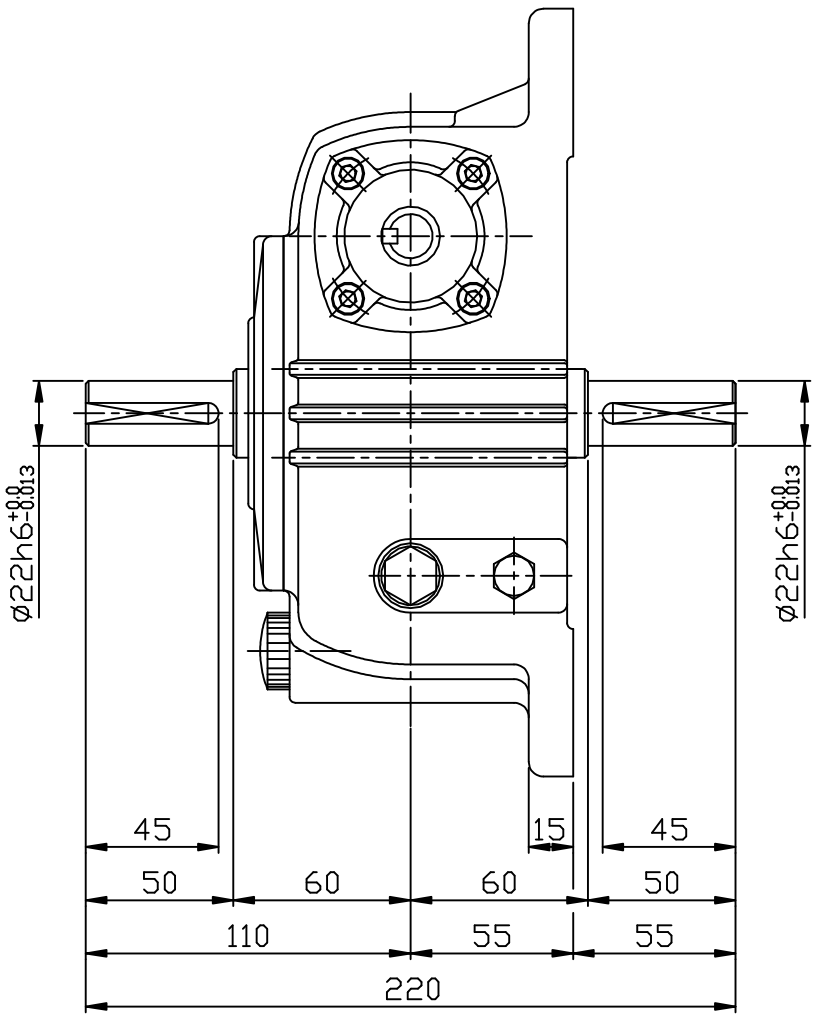


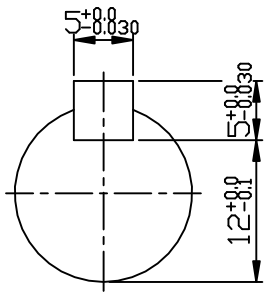


INPUT SHAFT

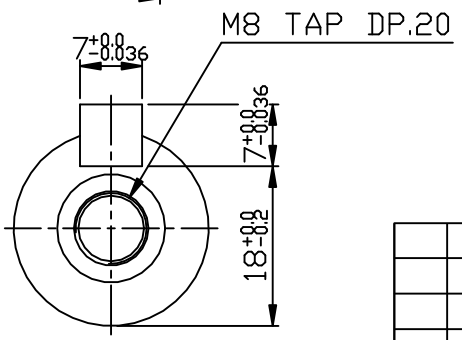


OUTPUT SHAFT

| |
|---|
| M5*0.8 |
| M6* 1 |
| M8*1.25 |
| M10*1.5 |
| M12*1.75 |
| M16* 2 |
| M18*2.5 |
| M20*2.5 |
| M22*2.5 |
| M24*3 |

| NO. | REVISION | DATE | NAME |
|---|---|---|---|
| | | | |

| NO | DESCRIPTION | MAT'S | Q'TY | SIZE |
|---|---|---|---|---|
| | | | | |

| | DATE | NAME |
|---|---|---|
| DESIGN | | |
| CHECK | | |
| APPROV | | |

SAMYANG
REDUCTION GEAR CO., LTD.

TITLE OUTLINE DWG.
MAX21 WORM REDUCER WV60
i=1/10~1/60 C-TYPE

WV60_C

SCALE 1/2

SHEET /