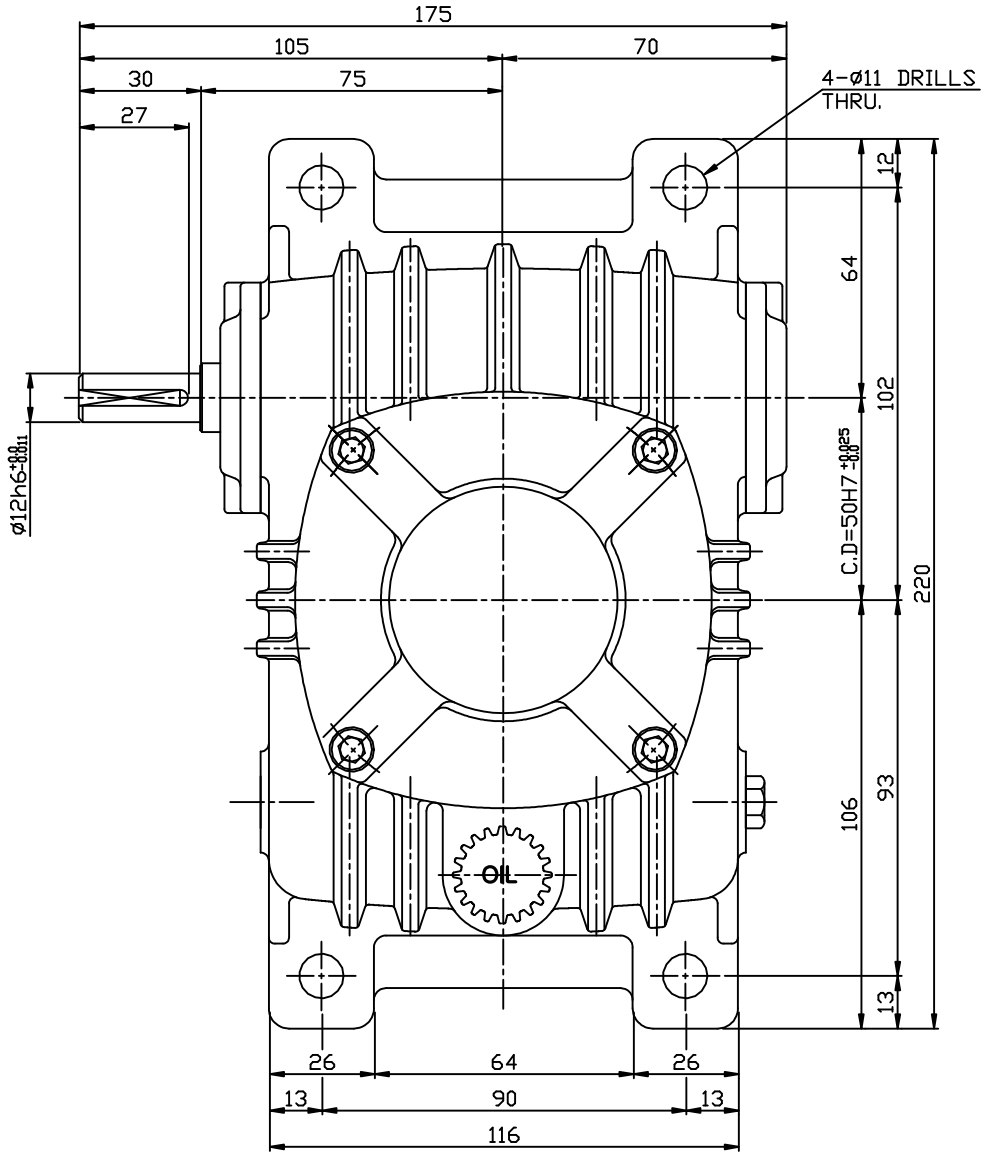

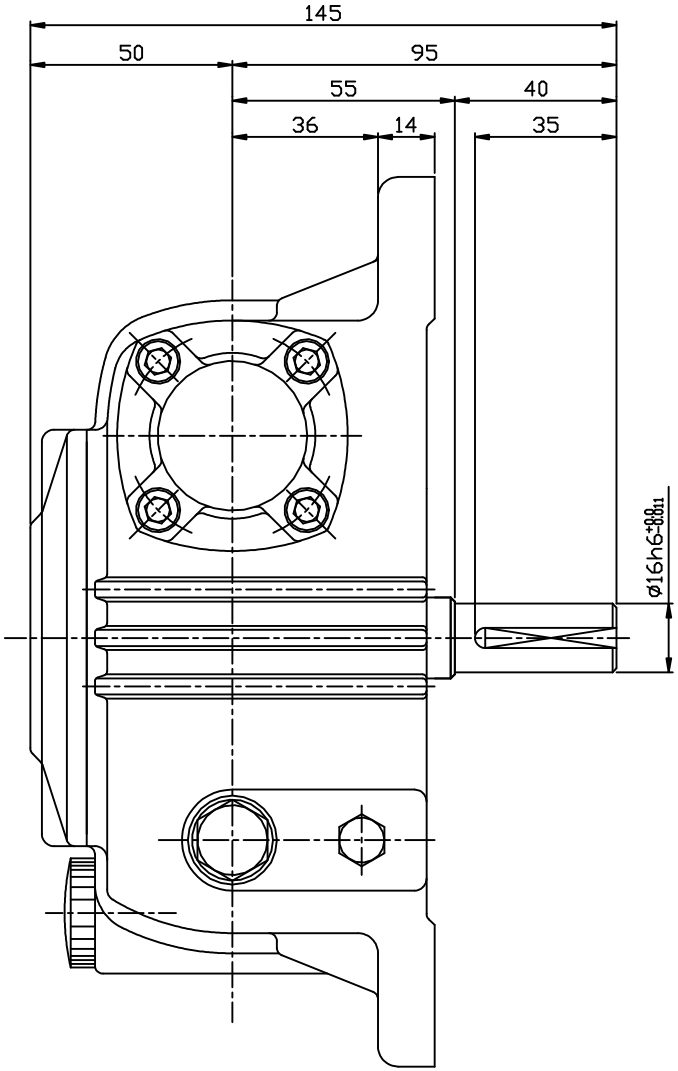

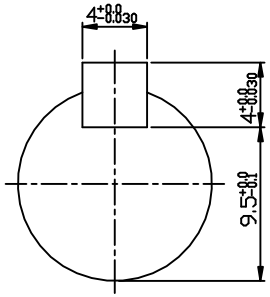

INPUT SHAFT

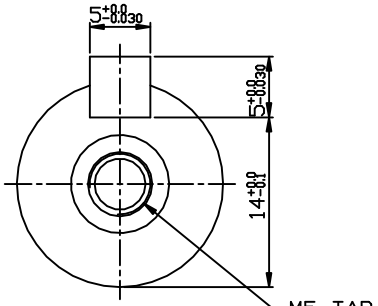

OUTPUT SHAFT

M5×0.8
M6× 1
M8×1.25
M10×1.5
M12×1.75
M16× 2
M18×2.5
M20×2.5
M22×2.5
M24×3

	DATE	NAME
DESIGN		
CHECK		
APPROV		

SAMYANG
REDUCTION GEAR CO., LTD.

TITLE OUTLINE DWG.
MAX21 WORM REDUCER WV50
i=1/10~1/60 E-TYPE

WV50_E

SCALE 1/1

SHEET