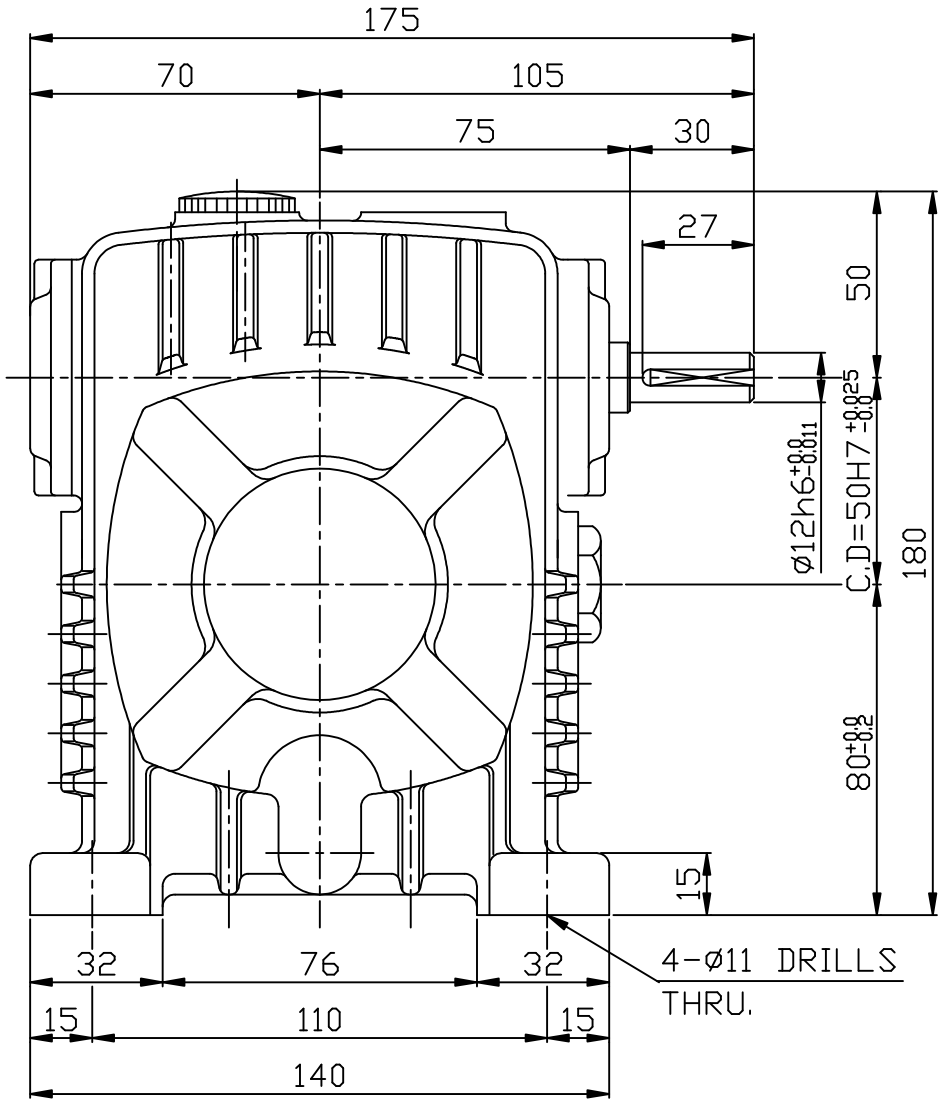

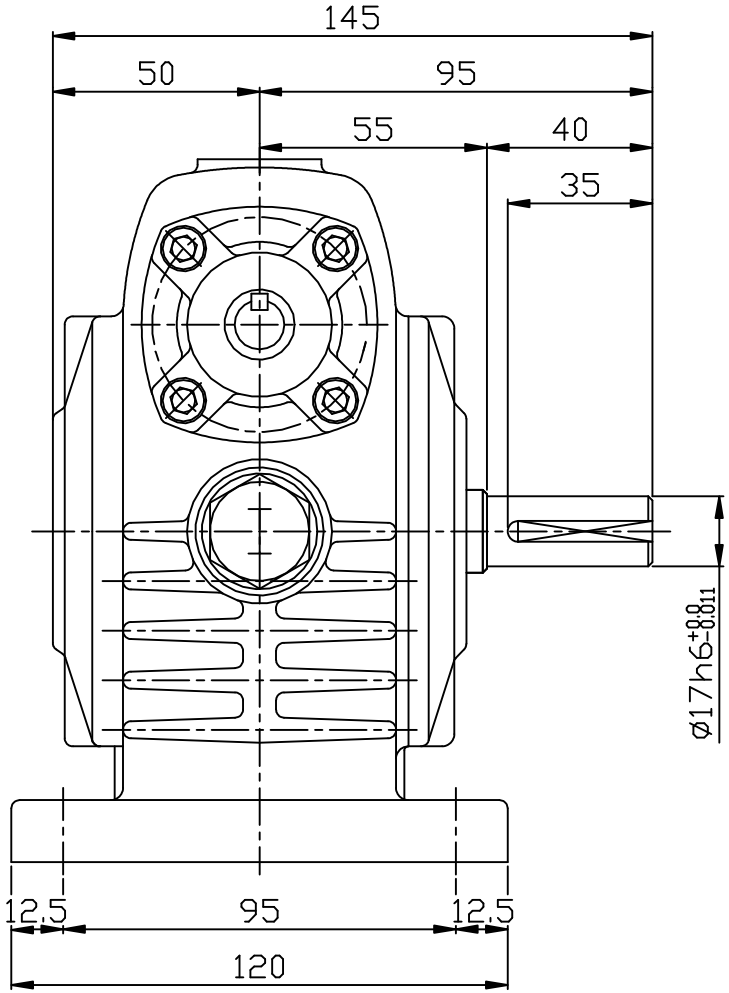

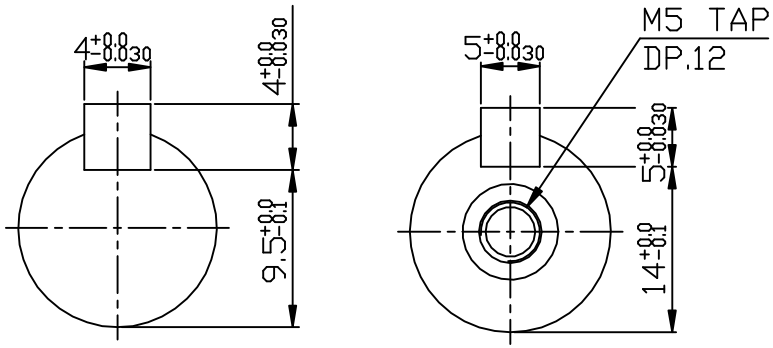

INPUT SHAFT OUTPUT SHAFT

M5*0.8
M6* 1
M8*1.25
M10*1.5
M12*1.75
M16* 2
M18*2.5
M20*2.5
M22*2.5
M24*3

NO.	REVISION	DATE	NAME

NO	DESCRIPTION	MAT'S	Q'TY	SIZE

	DATE	NAME
DESIGN	1999.4.15	D.W,SA
CHECK		
APPROV	1999.4.15	M.C,HUR

SAMYANG
REDUCTION GEAR CO., LTD.

TITLE OUTLINE DWG.
MAX21 WORM REDUCER WU50
i=1/10~1/60 A-TYPE

WU50_A

SCALE N/S

SHEET /