MATERIAL		Q'TY		By order

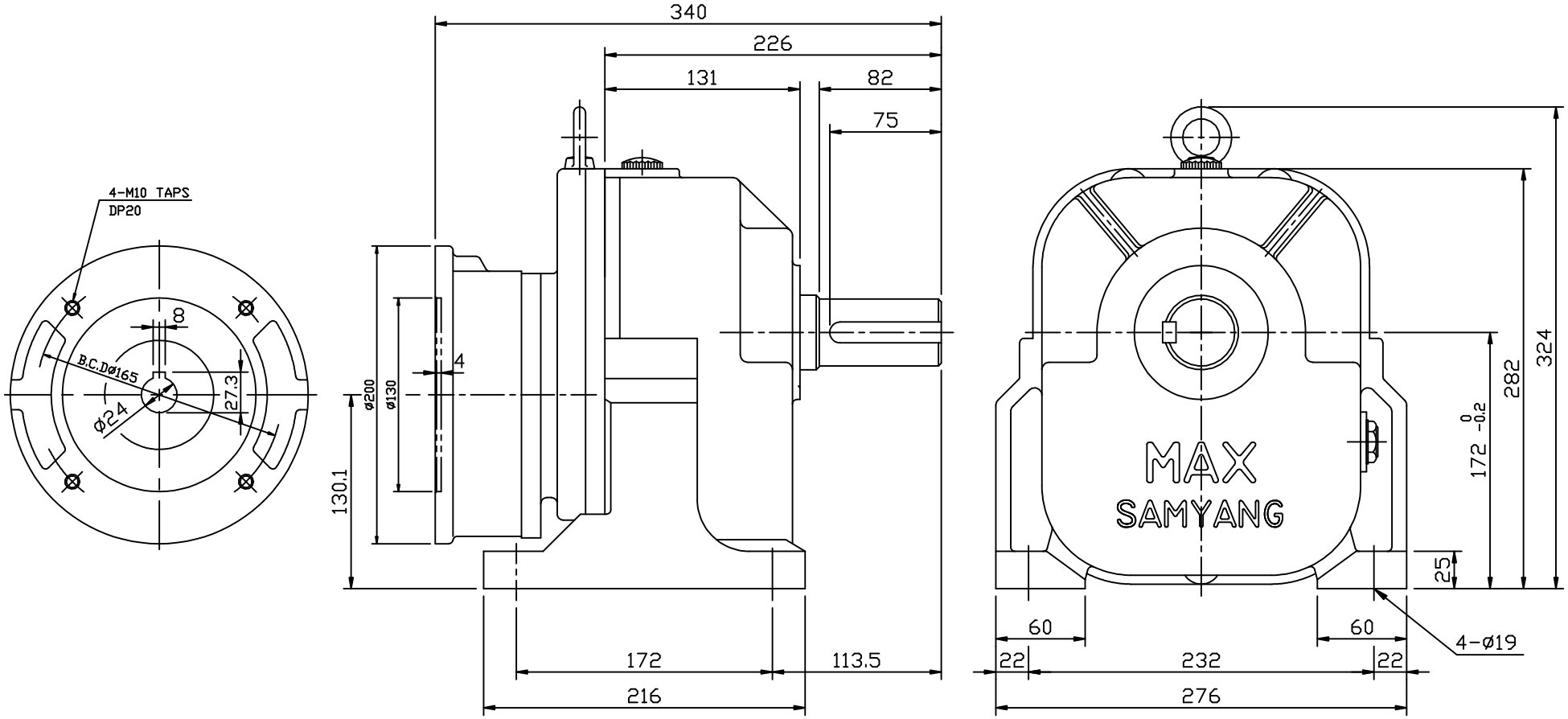

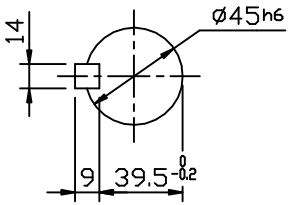

OUTPUT SHAFT

	DATE	NAME
DESIGN		
CHECK		
APPROV		

TITLE
MAX GEARED MOTOR F172
1.5KW-4P-3ø i=1/40~1/90
I.E.C FLANGE TYPE

SCALE 1/1

NO.	REVISION	DATE	NAME

SAMYANG
REDUCTION GEAR CO., LTD

PART

DWG. NO. F172-015-IEC

SHEET /

SYDWG1\MAX\O-LINE\HT SIZE 297*210(A4)