REV	ZONE	DESCRIPTIONS	DRWN	APPVD

DWG. NO.

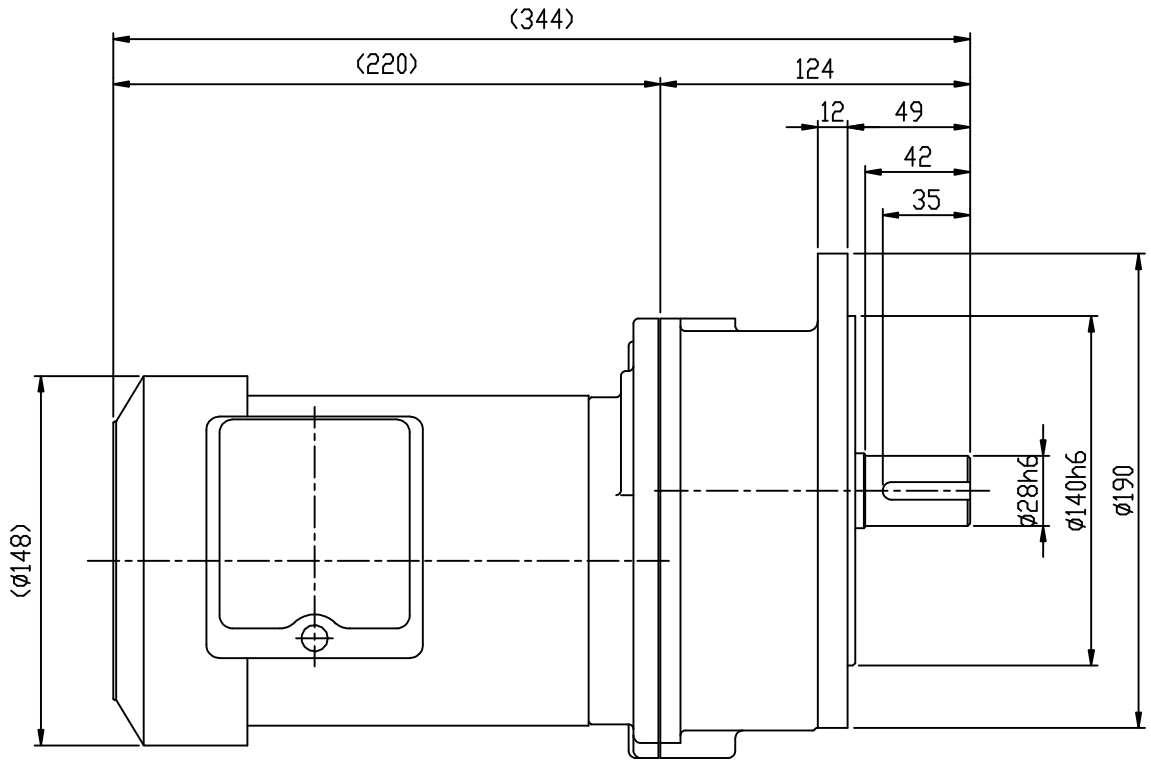

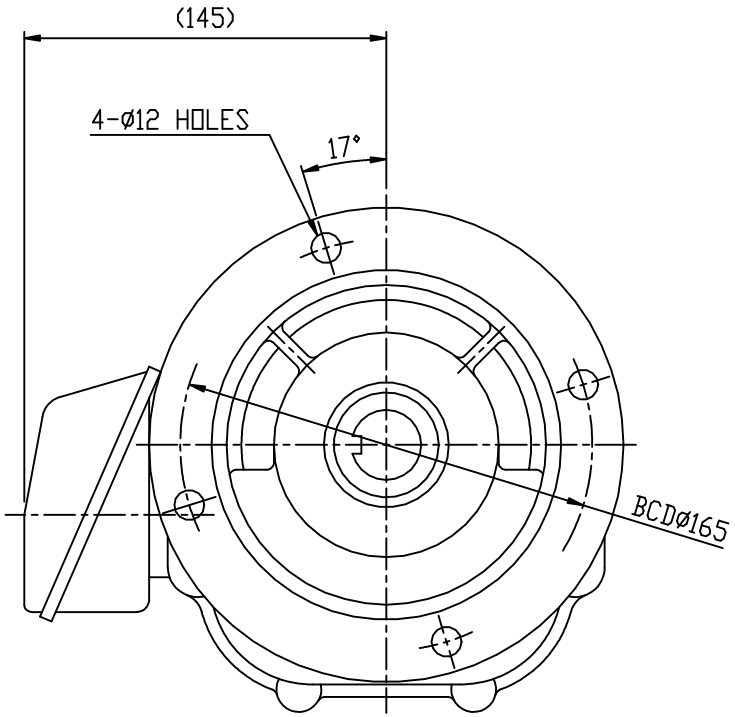

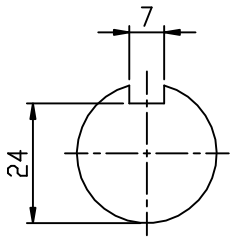

OUTPUT SHAFT

표기외 표준 가공 및 공차	
각도: ±0.5°	6 – 30 :±0.1
CHAMFER: C1.0	30 – 120 :±0.15
FILLET: R1.0	120 – 315 :±0.2
마무리: ▽▽	315– 1000 :±0.3
열처리:HRC	1000 이상 :±0.5

NO	PART NUMBER	DESCRIPTIONS	Q'TY	MATERIAL

	NAME	DATE
DESIGNED		
CHECKED		
APPROVED		

SAMYANG
REDUCTION GEARS CO., LTD

SCALE 1/3

DWG SIZE A4

TITLE MAX GEARED MOTOR V115
OUTLINE
1/2HP 4P (효성모터)

DWG. NO. V115-004-A

SHEET 1/1

REV

50mm